# SOUTHERN PACIFIC COMPANY

## PROGRAM OF RESEARCH
## ON
## OIL BURNING STEAM LOCOMOTIVES

## OIL BURNER TESTS

San Francisco, Calif.
September 5, 1951.

Report No. ST-5

## INDEX OF FIGURES - REPORT ST-5

## Index of Figures - Report ST-5 (Continued)

| Fig. No. | Subject | Drawing Reference |
|---|---|---|
| 26 | Graph, Nagel Oil Burner, Test B10-T18-AC | ST-354 |
| 27 | " , Gyrojet Burner ST-323, " B11-T19-AC | ST-355 |
| 28 | " , " " ST-366, " B12-T19-AD | ST-356 |
| 29 | " , " " ST-366A, " B13-T20-AC | ST-357 |
| 30 | Smokebox Arrangement, D, 1/2" x 3" BB, 8" nozzle | ST-360 |
| 31 | " " , AB, 1" SP, 9-1/2" " | ST-361 |
| 32 | " " , AC, 7/8" SP, 9-1/2" " | ST-362 |
| 33 | " " , AD, 3/4" SP, 9-1/2" " | ST-363 |
| 34 | " " , AE, 5/8", SP, 9-1/2" " | ST-364 |
| 35 | " " , AF, 1/2" x 3" BB, 8-3/4" nzl. | ST-365 |
| 36 | Firepan Arrangement, T10, Coen Burners | ST-312 |
| 37 | " " , T11, Mod. T&NO 2" Tubes | ST-314 |
| 38 | " " , T12, " " " " | ST-315 |
| 39 | " " , T13, " " " " | ST-316 |
| 40 | " " , T14, " " " " | ST-318 |
| 41 | " " , T15, " " for Alex. Burner | ST-320 |
| 42 | " " , T16, " " 2" Tubes | ST-321 |
| 43 | " " , T17, " " " " & Firedoor | ST-322 |
| 44 | " " , T18, Nagel Burners | ST-331 |
| 45 | " " , T19, Taper Firepan | ST-358 |
| 46 | " " , T20, " " | ST-359 |
| 47 | Firepan Draft Bottom Ring 2-3/4" x 28" | ST-297 |
| 48 | " " " " 3/4" x 28" | ST-298 |

# INDEX OF PHOTOGRAPHS - REPORT ST-5

## INDEX OF PHOTOGRAPHS - REPORT ST-5 (Continued)

## INDEX OF PHOTOGRAPHS - REPORT ST-5 (Continued)

## INDEX OF PHOTOGRAPHS - REPORT ST-5 (Continued)

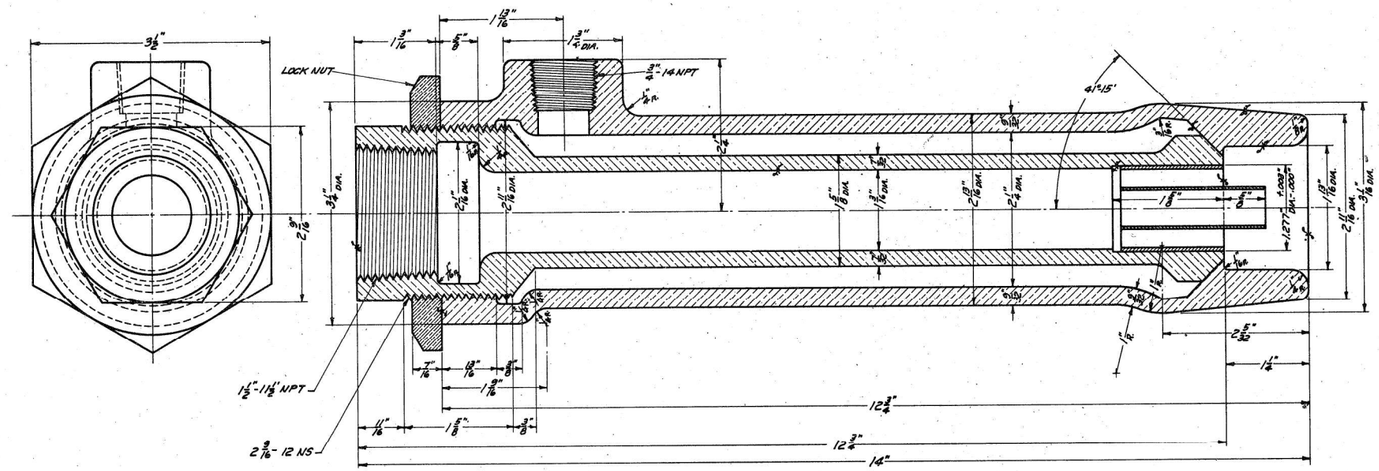


NOTES:
IN ADDITION TO PATTERN NUMBER, THE FOLLOWING TO BE CAST ON OUTSIDE OF CASING NEAR TOP:
"SOUTHERN PACIFIC COMPANY
GYROJET OIL BURNER
PAT. APP. FOR"

ALL LETTERING ON OUTSIDE OF BURNER TO BE MADE WITH DEPRESSED LETTERING

| PART | MATERIAL | PATTERN NO |
|---|---|---|
| NOZZLE | PRESSURE BRONZE SPEC CS-12 | LB 13273 |
| CASING | | LB 13274 |
| LOCK NUT | BRONZE | LB 13279 |

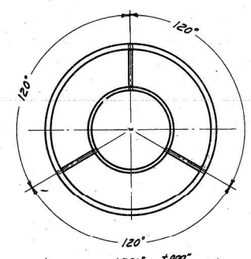


LOW TEMPERATURE HARD SOLDER, CONTINUOUS OR SPOT WELD

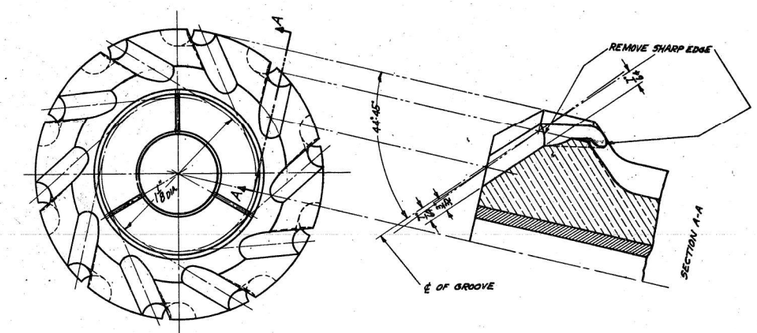


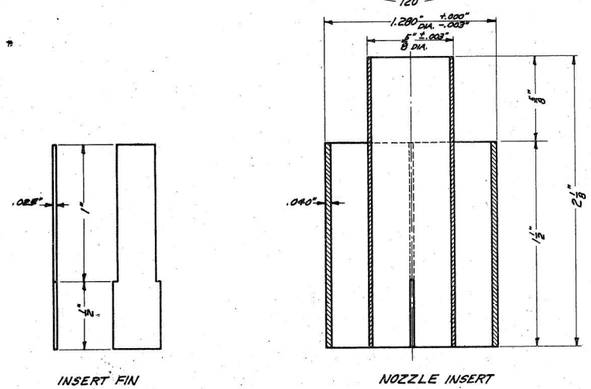


INSERT FIN

NOZZLE INSERT

MATERIAL: SHEET; HALF HARD BRASS
TUBING; DRAWN BRASS ALLOY NO 2 ASTM B-175
OR
STAINLESS STEEL 18-8
OR
MONEL

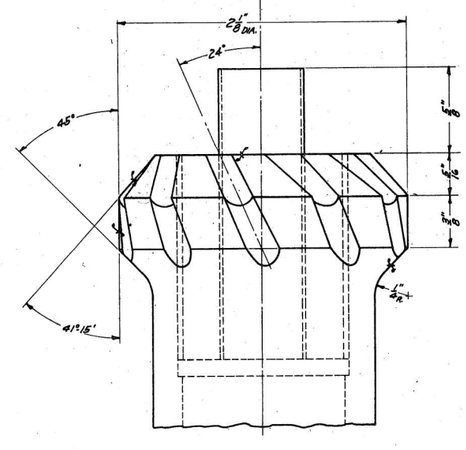


FIGURE 1.

| USED ON LOCOMOTIVES - CLASSES | |
|---|---|
| AC-4,5,6,7,8,9,10,11,12 | |
| F-1,3,4,5 | |
| GS-1,2,3,4,5,6 | |
| MT-1,3,4,5 | |
| SP-1,2,3 | |

SOUTHERN PACIFIC LINES
COMMON STANDARD

GYROJET OIL BURNER

SCALE: 12 & 24 IN = 1 FT. DATE: JUNE 27, 1951.

GROUP 60

CL 101850

"X" DENOTES FINISH

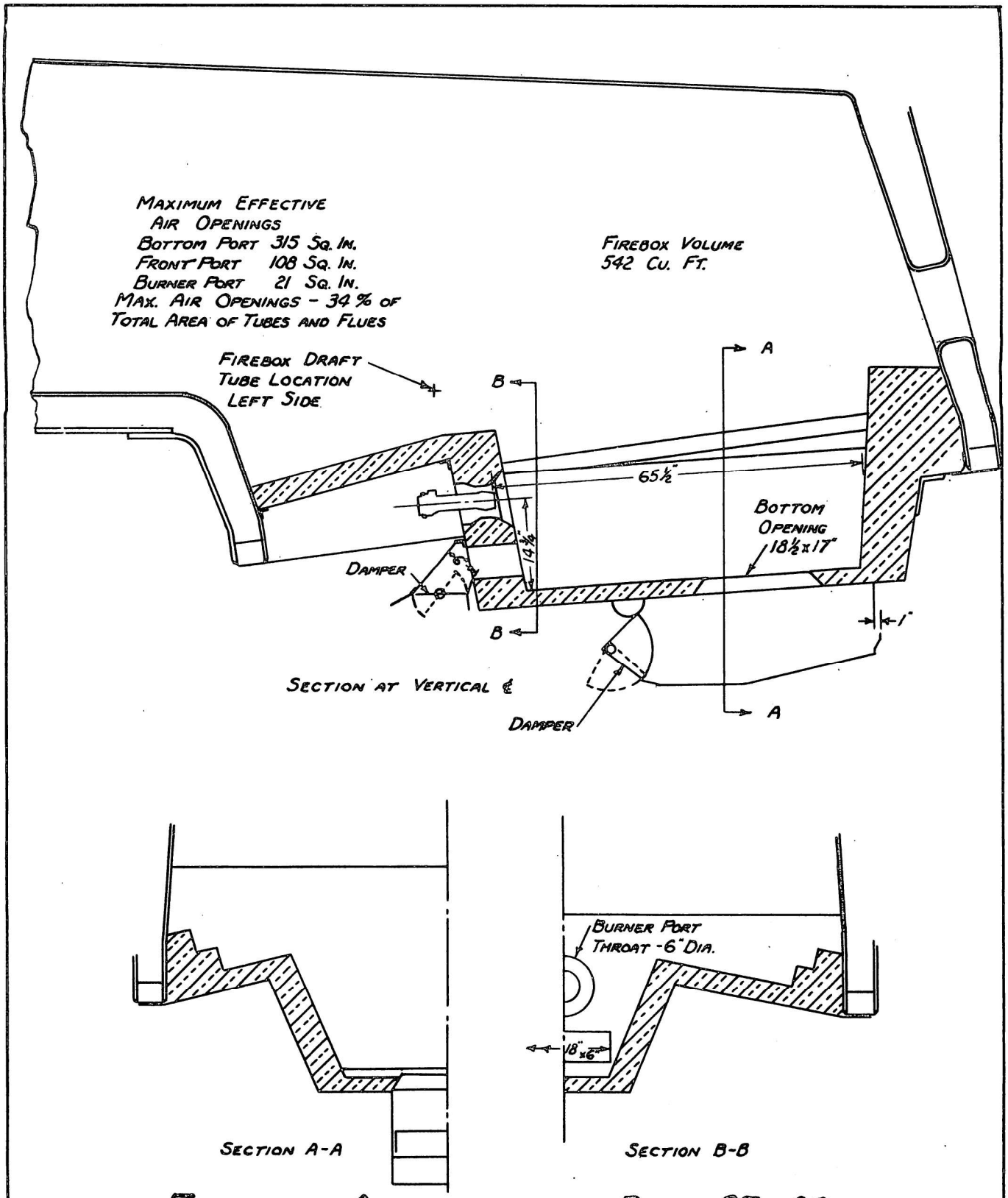


# FIREPAN ARRANGEMENT, RUNS 27-40 WITHOUT CIRCULATORS

ENGINE SP-4401 CLASS GS-1

FIG. 2

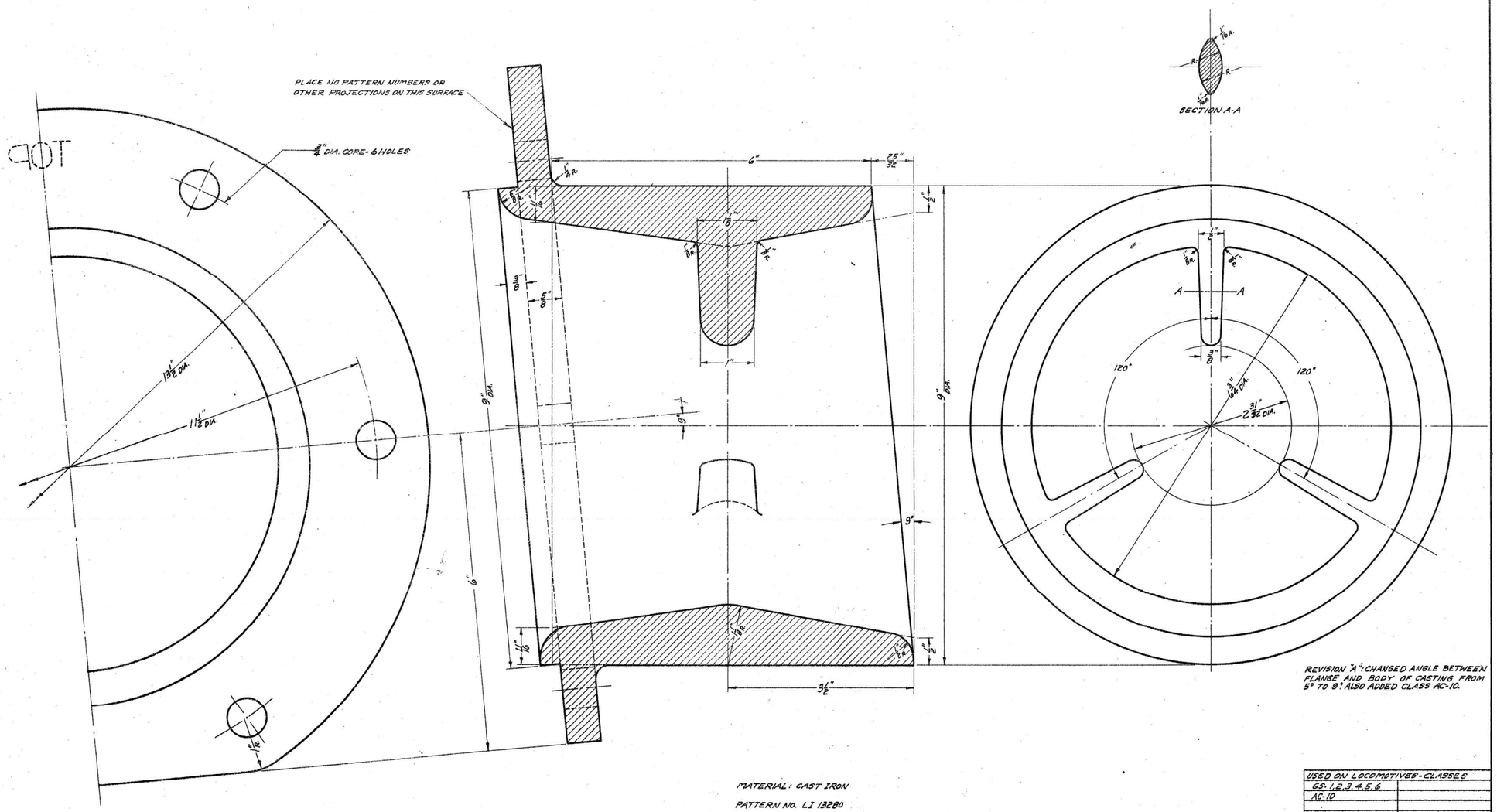

PLACE NO PATTERN NUMBERS OR OTHER PROJECTIONS ON THIS SURFACE

REVISION "A": CHANGED ANGLE BETWEEN FLANGE AND BODY OF CASTING FROM 5° TO 9°. ALSO ADDED CLASS AC-10.

MATERIAL: CAST IRON

PATTERN NO. LI 13280

| USED ON LOCOMOTIVES-CLASSES | |
|---|---|
| GS-1,2,3,4,5,6 | |
| AC-10 | |

SOUTHERN PACIFIC COMPANY

COMMON STANDARD

## OIL BURNER PORT

SCALE: 12 IN. = 1 FT. DATE: JANUARY 17, 1951.

GROUP 10

CL 101826 A 4-16-51

FIG 3

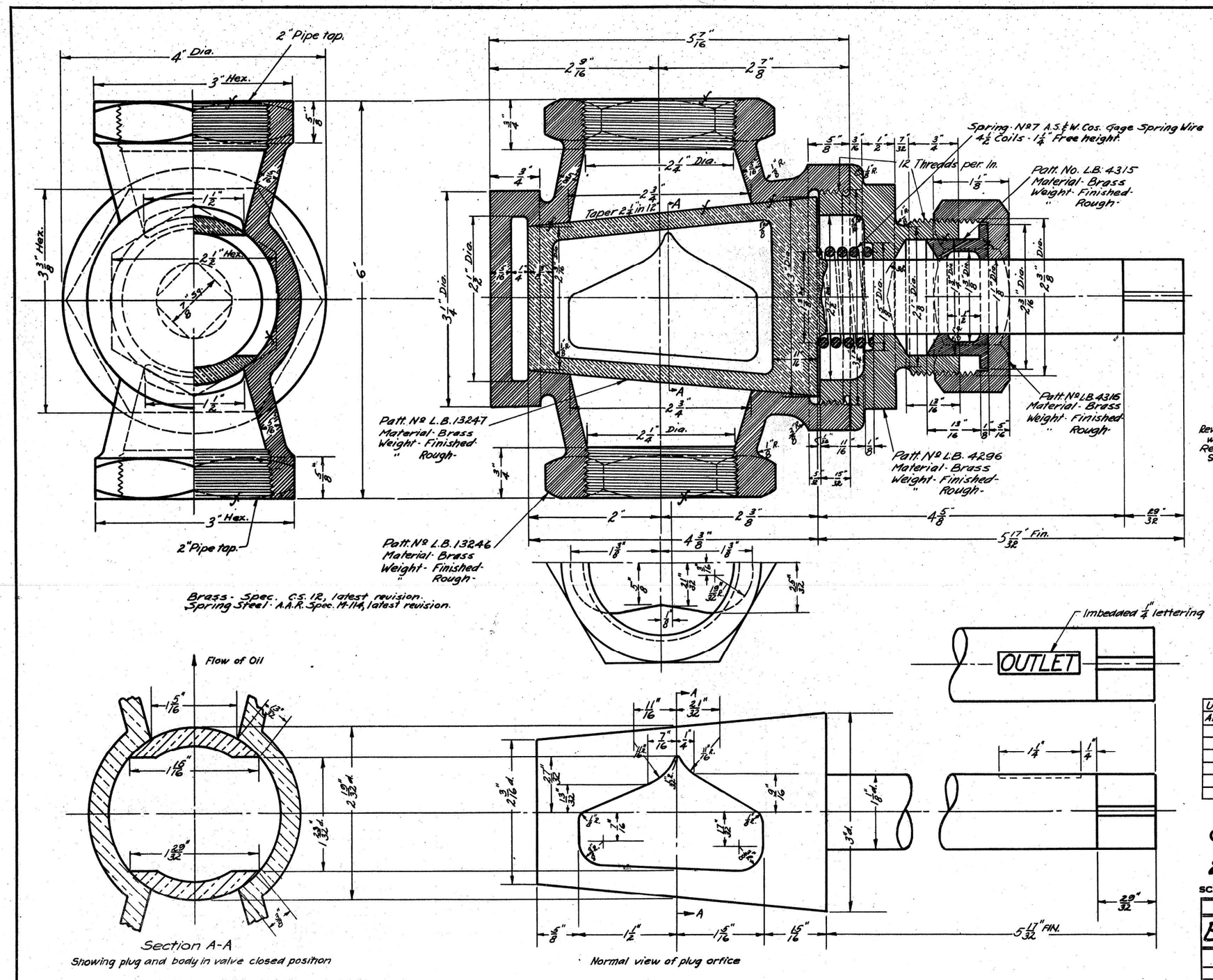


Revision "A" Corrected plug orfice to agree with orfice as manufactured.
Revision "B" Issued as Common Standard drg.

| USED ON LOCOMOTIVES-CLASSES | |
|---|---|
| ALL CLASSES OF OIL BURNING LOCO'S | |

**SOUTHERN PACIFIC LINES**

**COMMON STANDARD**

**2 In. Oil Feed Cock**

SCALE: 12" = 1'-0" January 28, 1949

GROUP 60

| BL 101516 | A | B |
|---|---|---|
| | 3-30-49 | 4-13-49 |

FIG. 4

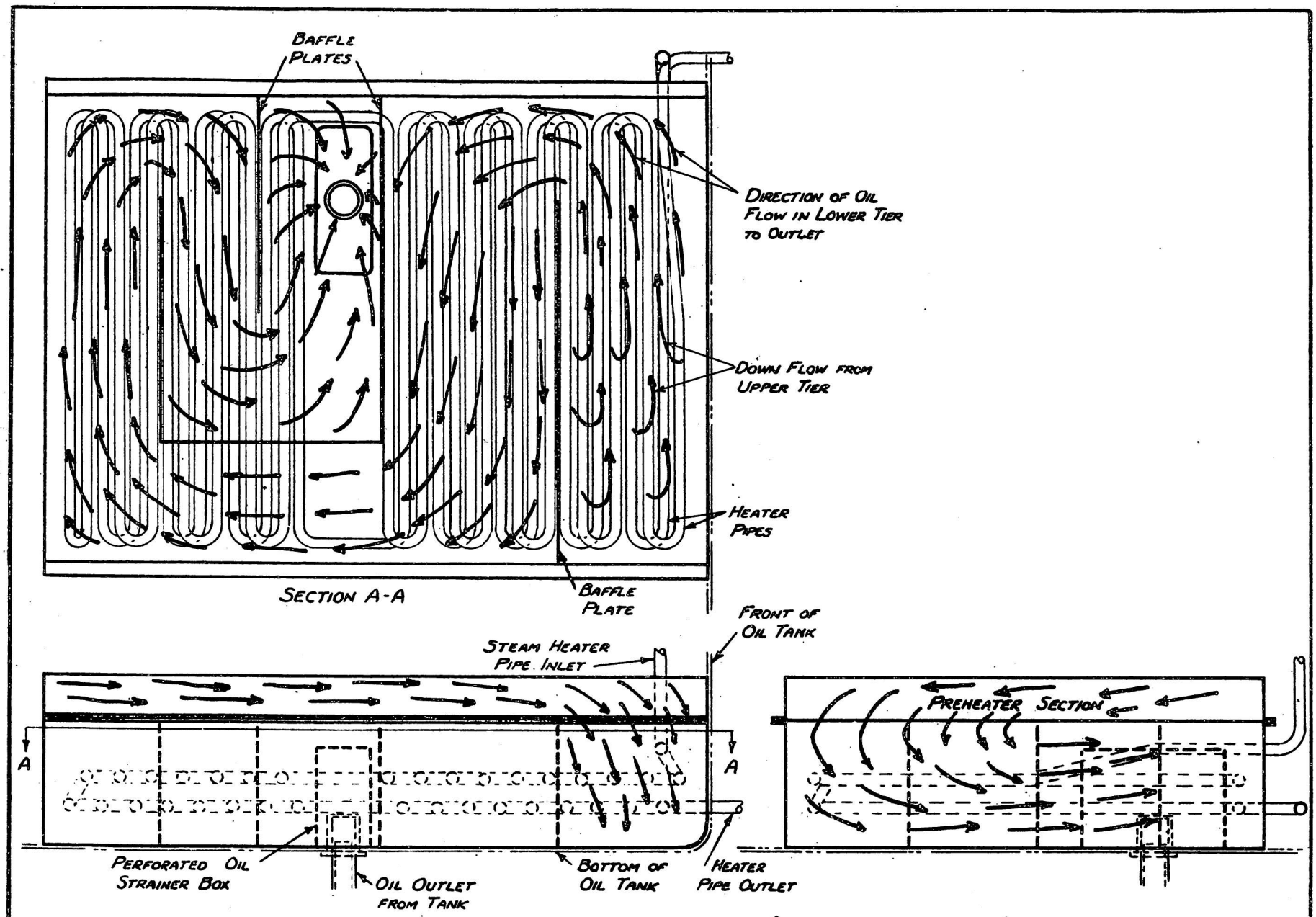


IMPROVED OIL TANK HEATER (BAFFLE TYPE)

FIG. 5

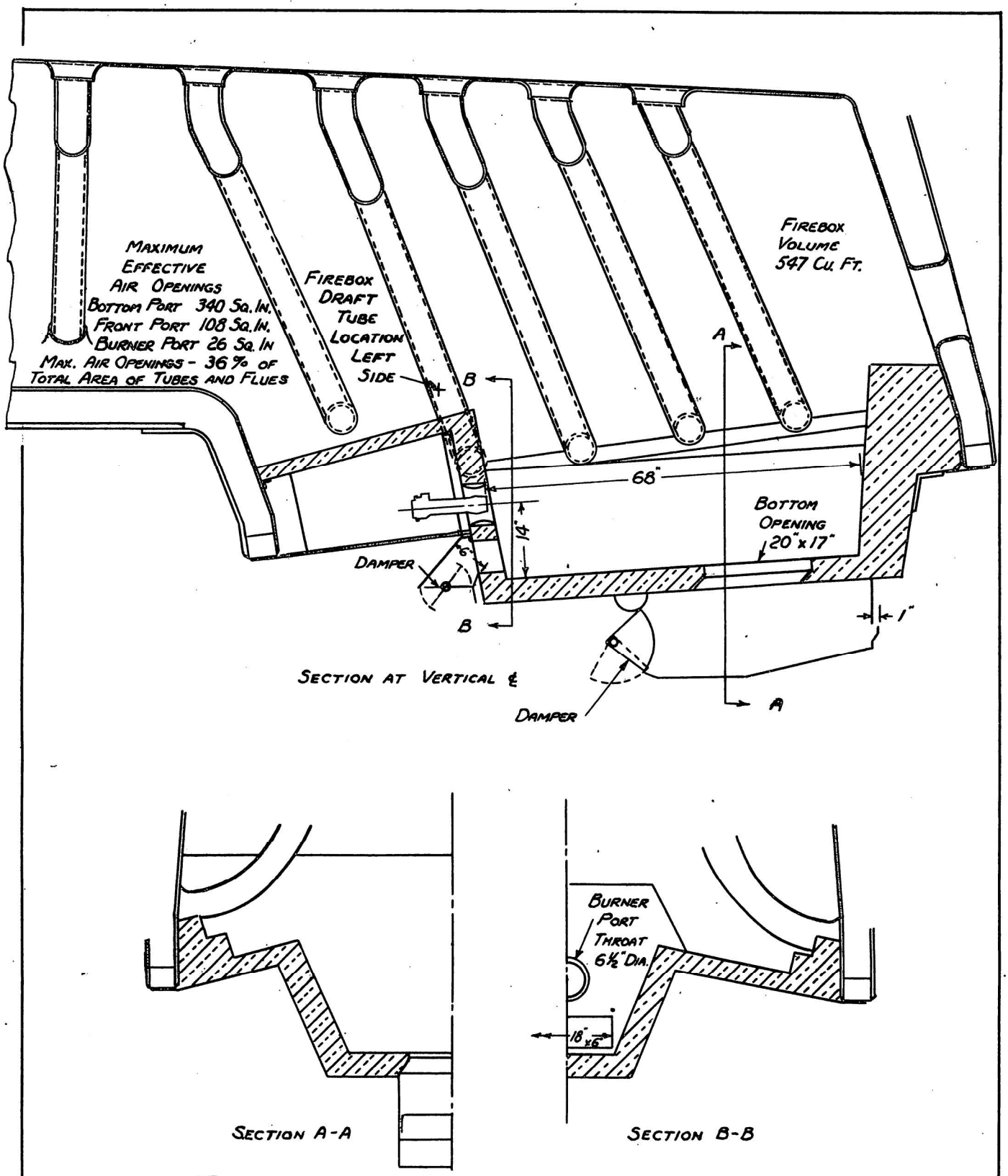


# FIREPAN ARRANGEMENT, RUNS 1-24 WITH CIRCULATORS

ENGINE SP-4401 CLASS GS-1

FIG. 6

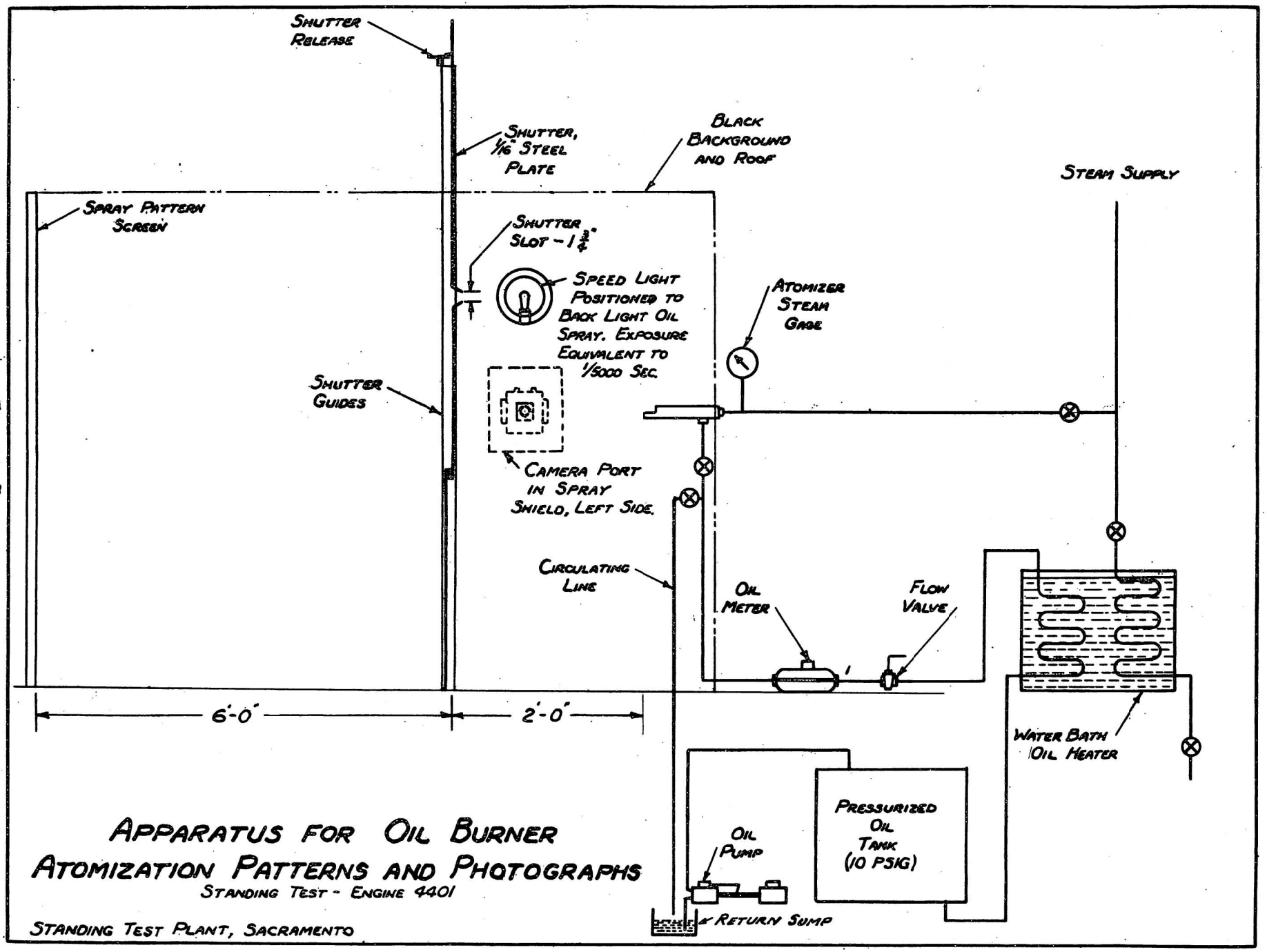


Fig. No. 7

# Apparatus for Oil Burner Atomization Patterns and Photographs

Standing Test - Engine 4401

Standing Test Plant, Sacramento

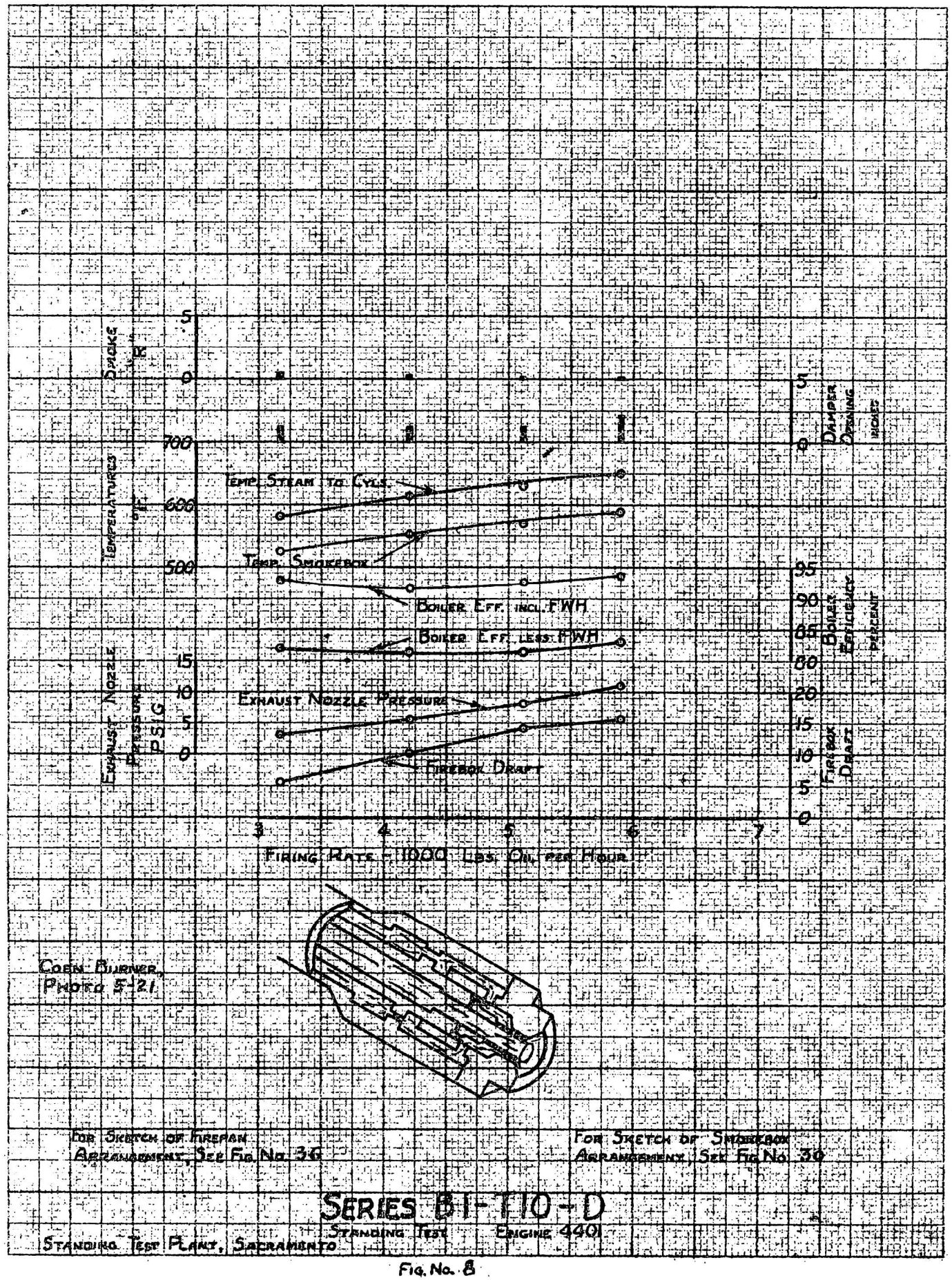
Choke
Inches
Temperatures
°F
700
600
500
Temp. Steam to Cyls.
Temp. Smokebox
Boiler Eff. incl. FWH
Boiler Eff. less FWH
Exhaust Nozzle Pressure
Firebox Draft
Exhaust Nozzle Pressure
PSIG
15
10
5
0
Damper Opening
Inches
Boiler Efficiency
Percent
95
90
85
80
Firebox Draft
20
15
10
5
0
3
4
5
6
7
Firing Rate - 1000 Lbs. Oil per Hour
Coen Burner
Photo 5-21
For Sketch of Firepan Arrangement, See Fig. No. 36
For Sketch of Smokebox Arrangement, See Fig. No. 30
Series B1-T10-D
Standing Test Engine 4401
Standing Test Plant, Sacramento

Fig. No. 8

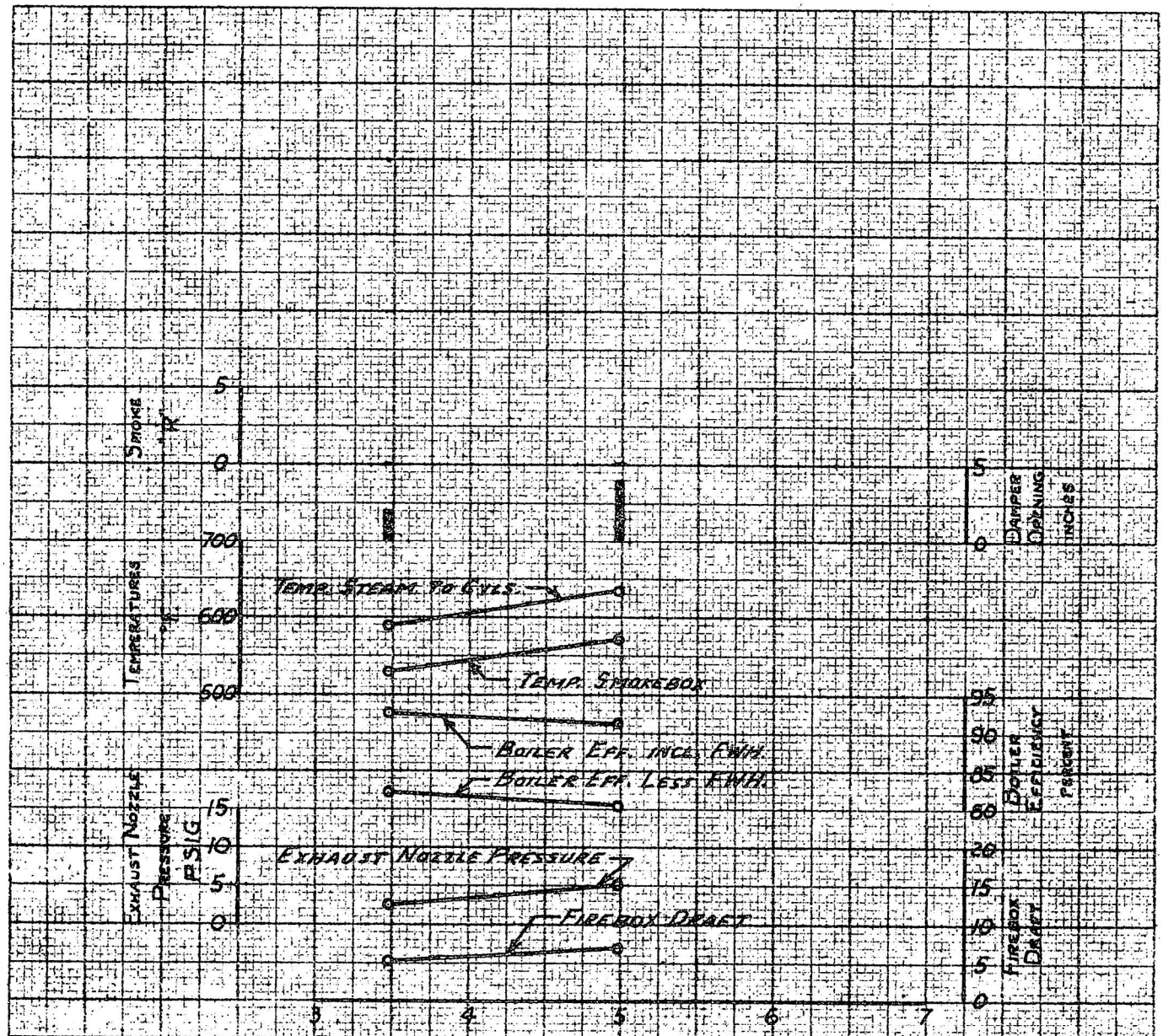


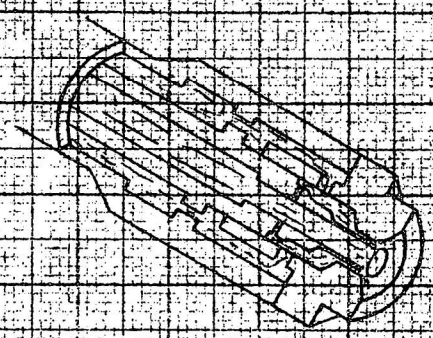

Coen Burner,
Photo 5-21

For Sketch of Firepan Arrangement, See Fig. No. 36

For Sketch of Smokebox Arrangement, See Fig. No. 35

# Series B1-T10-AF

Standing Test Engine 4401

Standing Test Plant, Sacramento

Fig. No. 9

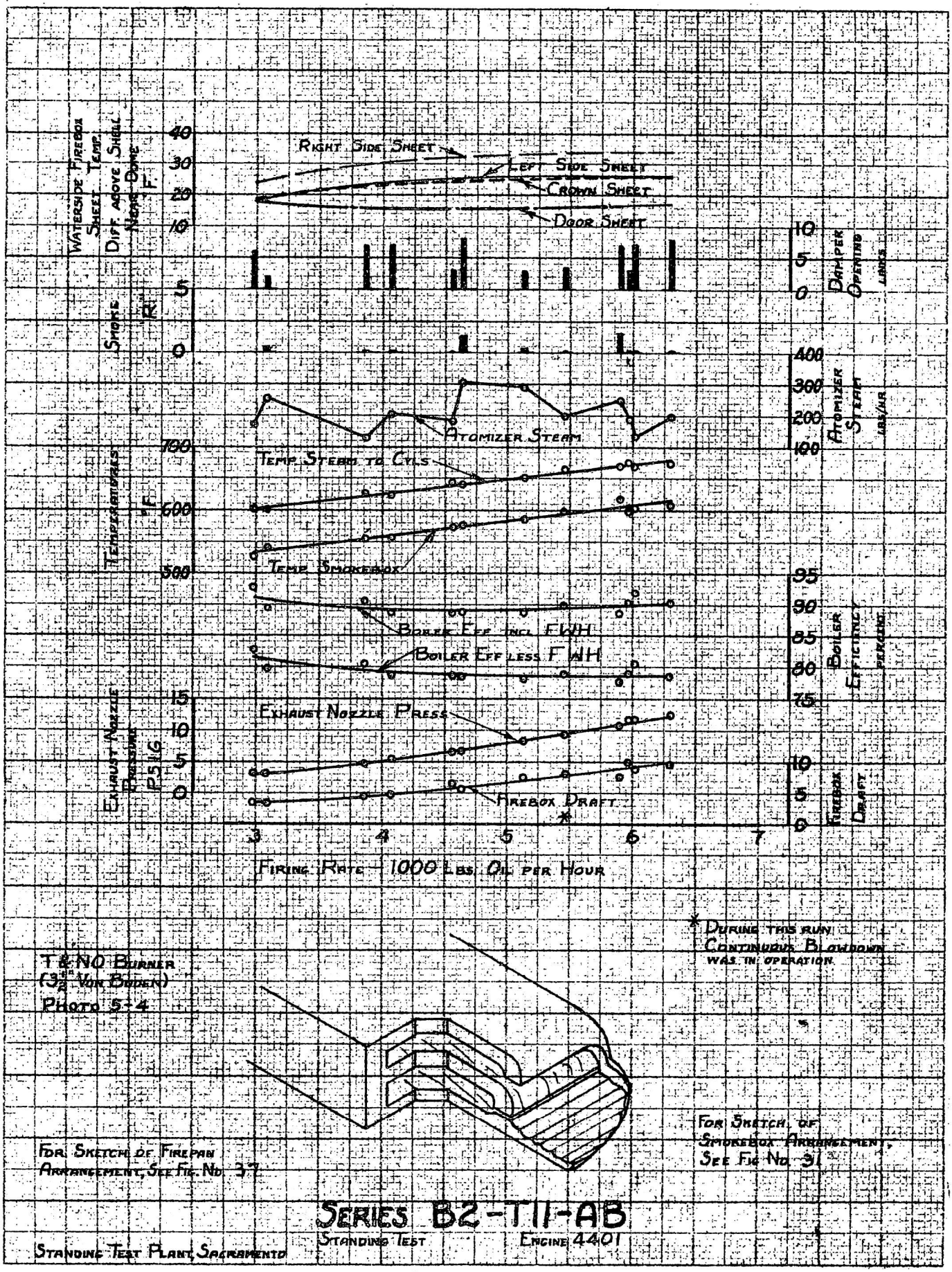
Waterside Firebox Sheet Temp. Diff. above Shell Near Dome °F.
40
30
20
10
Right Side Sheet
Left Side Sheet
Crown Sheet
Door Sheet
Smoke R
5
0
L
Damper Opening Lbs.
10
5
0
Atomizer Steam Lbs/hr
400
300
200
100
Atomizer Steam
Temperatures °F
700
600
500
Temp. Steam to Cyls
Temp. Smokebox
Boiler Eff. Incl. FWH
Boiler Eff. less FWH
Boiler Efficiency Percent
95
90
85
80
75
Exhaust Nozzle Pressure PSIG
15
10
5
0
Exhaust Nozzle Press.
Firebox Draft
Firebox Draft
10
5
0
3
4
5
6
7
Firing Rate - 1000 Lbs. Oil per Hour
* During this run Continuous Blowdown was in operation.
T&NO Burner (3½" Van Boden)
Photo 5-4
For Sketch of Firepan Arrangement, See Fig. No. 37
For Sketch of Smokebox Arrangement, See Fig. No. 31
Series B2-T11-AB
Standing Test
Engine 4401
Standing Test Plant, Sacramento

Fig. No. 10

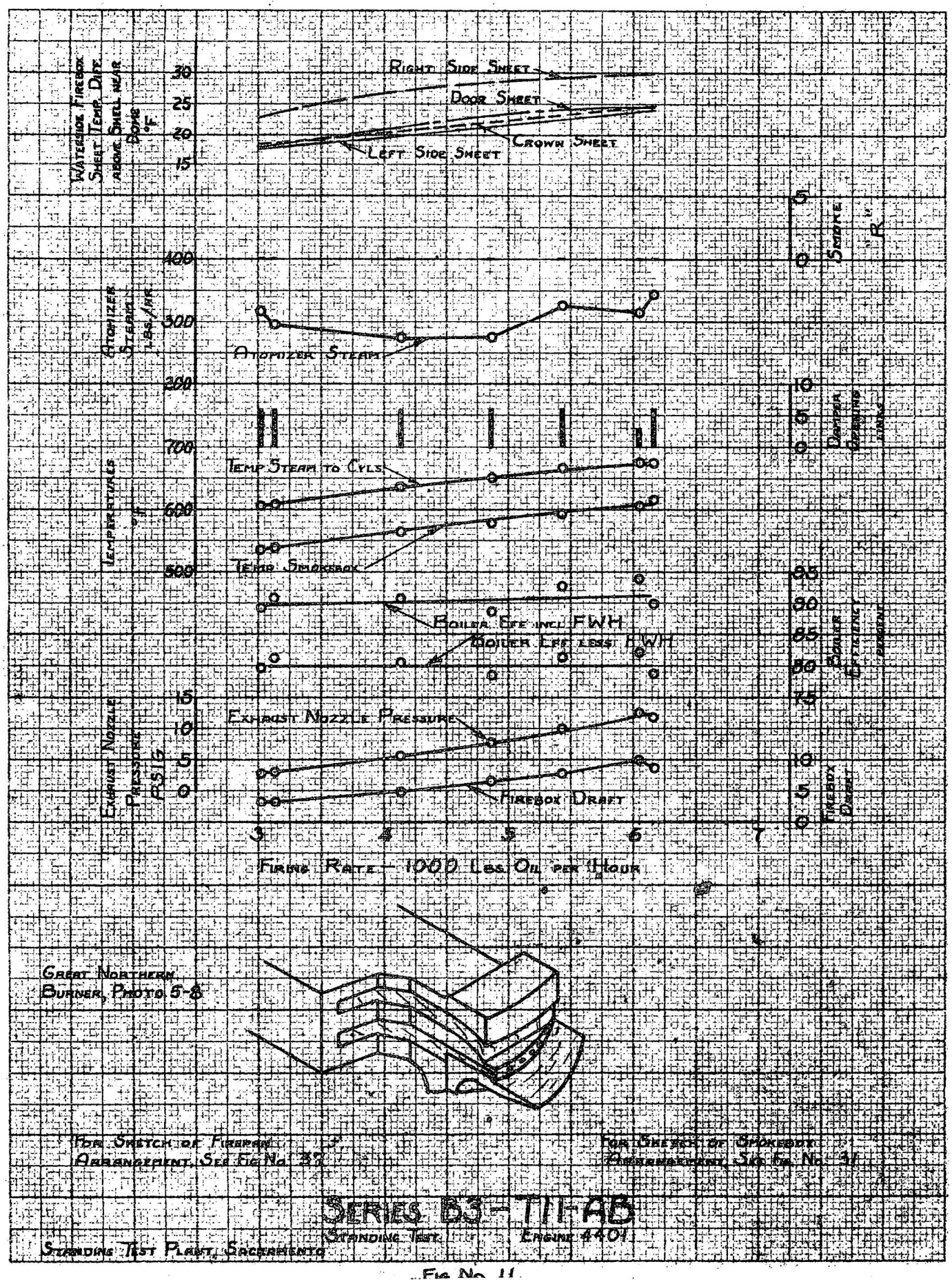
Waterside Firebox Sheet Temp. Diff. Above Shell near Dome °F
30
25
20
15
Right Side Sheet
Door Sheet
Crown Sheet
Left Side Sheet
Atomizer Steam Lbs./Hr.
400
300
200
Atomizer Steam
Temperatures °F
700
600
500
Temp Steam to Cyls
Temp Smokebox
Boiler Eff incl FWH
Boiler Eff less FWH
Exhaust Nozzle Pressure PSIG
15
10
5
0
Exhaust Nozzle Pressure
Firebox Draft
Smoke
Damper Operating Angle
Boiler Efficiency Percent
95
90
85
80
75
Firebox Draft
3
4
5
6
7
Firing Rate - 1000 Lbs. Oil per Hour
Great Northern Burner, Photo 5-8
For Sketch of Firebox Arrangement, See Fig. No. 32
For Sketch of Smokebox Arrangement, See Fig. No. 31
Series B3-T11-AB
Standing Test
Engine 4401
Standing Test Plant, Sacramento

Fig. No. 11

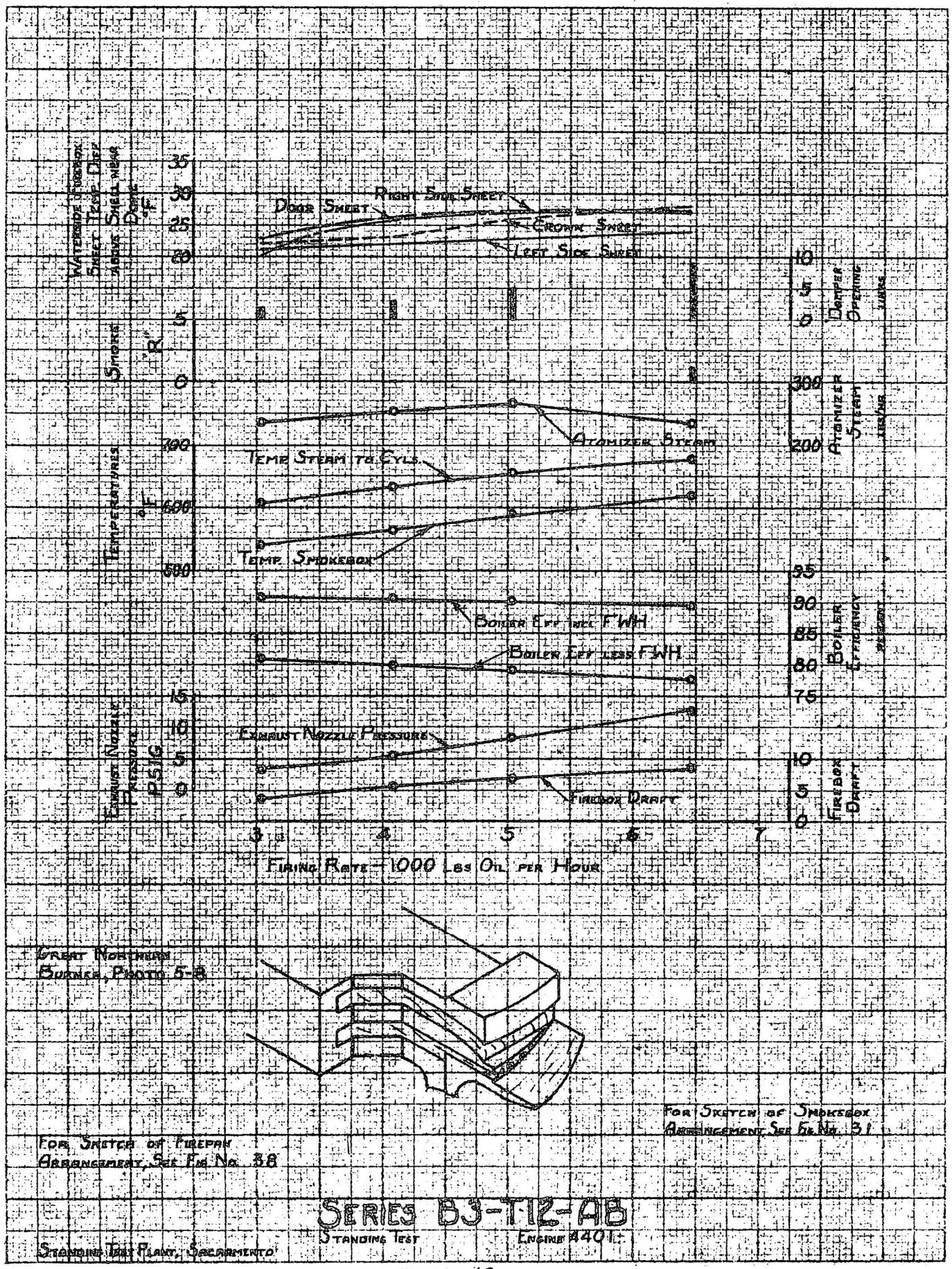


Great Northern Burner, Photo 5-8

For Sketch of Firepan Arrangement, See Fig. No. 38

For Sketch of Smokebox Arrangement, See Fig. No. 31

SERIES BJ-T12-AB

Standing Test

Engine 4401

Standing Test Plant, Sacramento

Fig. No. 12

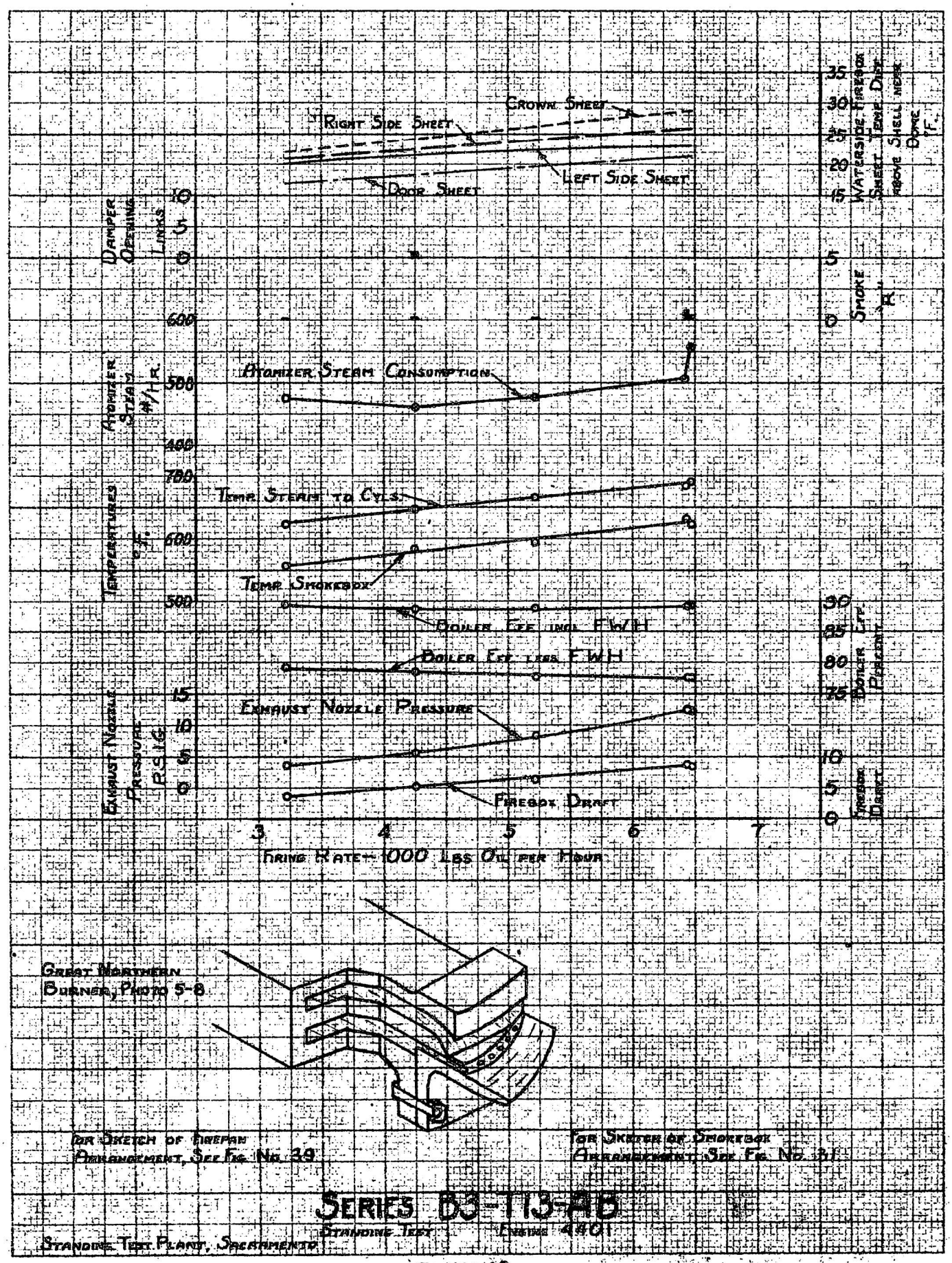


Great Northern Burner, Photo 5-8



For Sketch of Firepan Arrangement, See Fig. No. 39

For Sketch of Smokebox Arrangement, See Fig. No. 31

# Series B3-T13-AB

Standing Test — Engine 4401

Standing Test Plant, Sacramento

Fig. No. 13

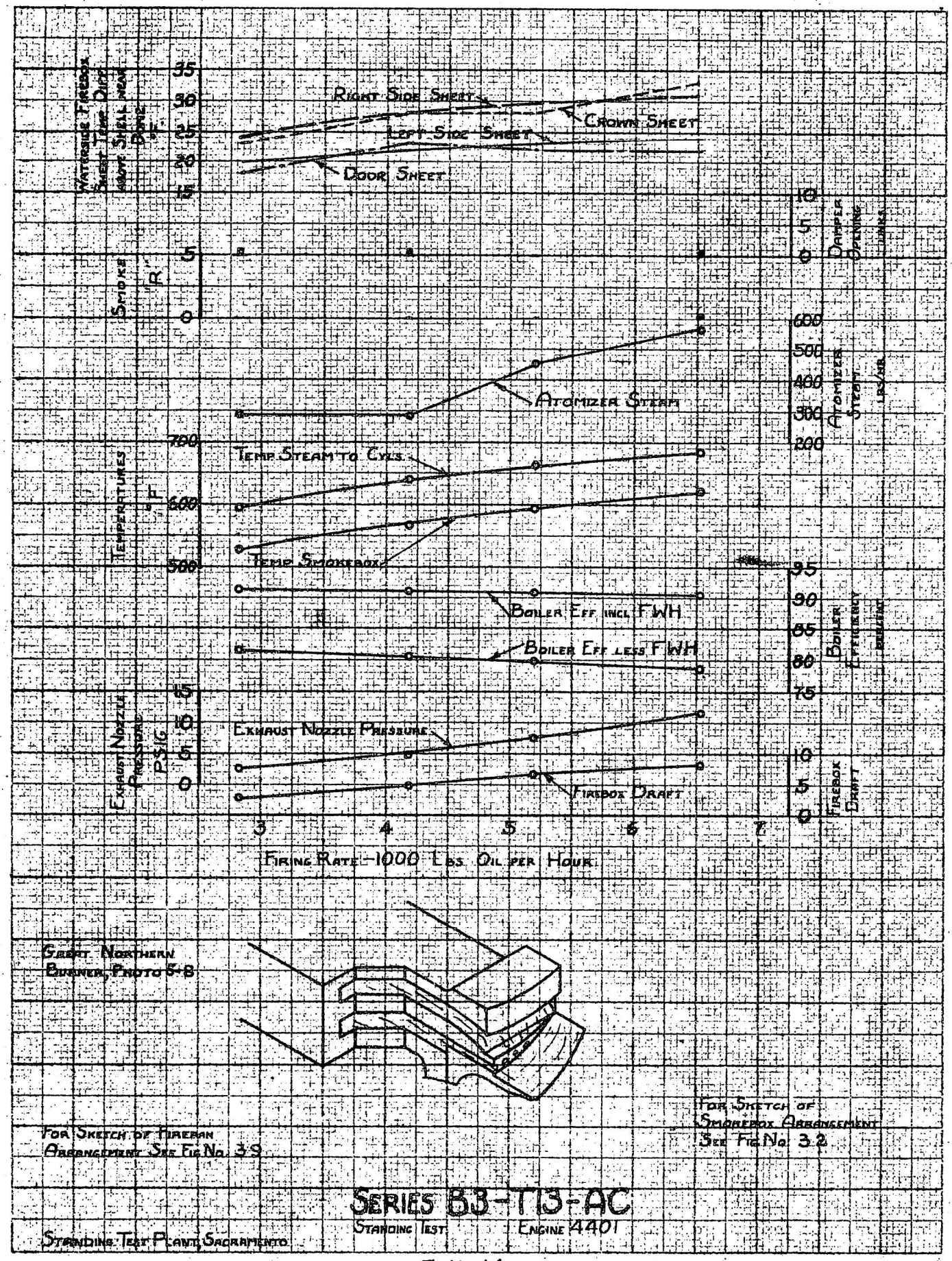
Waterside Firebox Sheet Temp Diff Mean Shell Mean Diff °F
35
30
25
20
15
Right Side Sheet
Crown Sheet
Left Side Sheet
Door Sheet
Smoke "R"
5
0
Damper Opening Ins.
10
5
0
Atomizer Steam Lbs/Hr.
600
500
400
300
200
Atomizer Steam
Temperatures °F
700
600
500
Temp Steam to Cyls.
Temp Smokebox
Boiler Eff. incl. FWH
Boiler Eff less FWH
Boiler Efficiency Percent
95
90
85
80
75
Exhaust Nozzle Pressure PSIG
15
10
5
0
Exhaust Nozzle Pressure
Firebox Draft
Firebox Draft
10
5
0
3
4
5
6
7
Firing Rate—1000 Lbs. Oil per Hour
Great Northern Burner, Photo 5-8
For Sketch of Fireman Arrangement See Fig. No. 39
For Sketch of Smokebox Arrangement See Fig. No. 32
Series 53-T13-AC
Standing Test Engine 4401
Standing Test Plant, Sacramento

Fig. No. 14

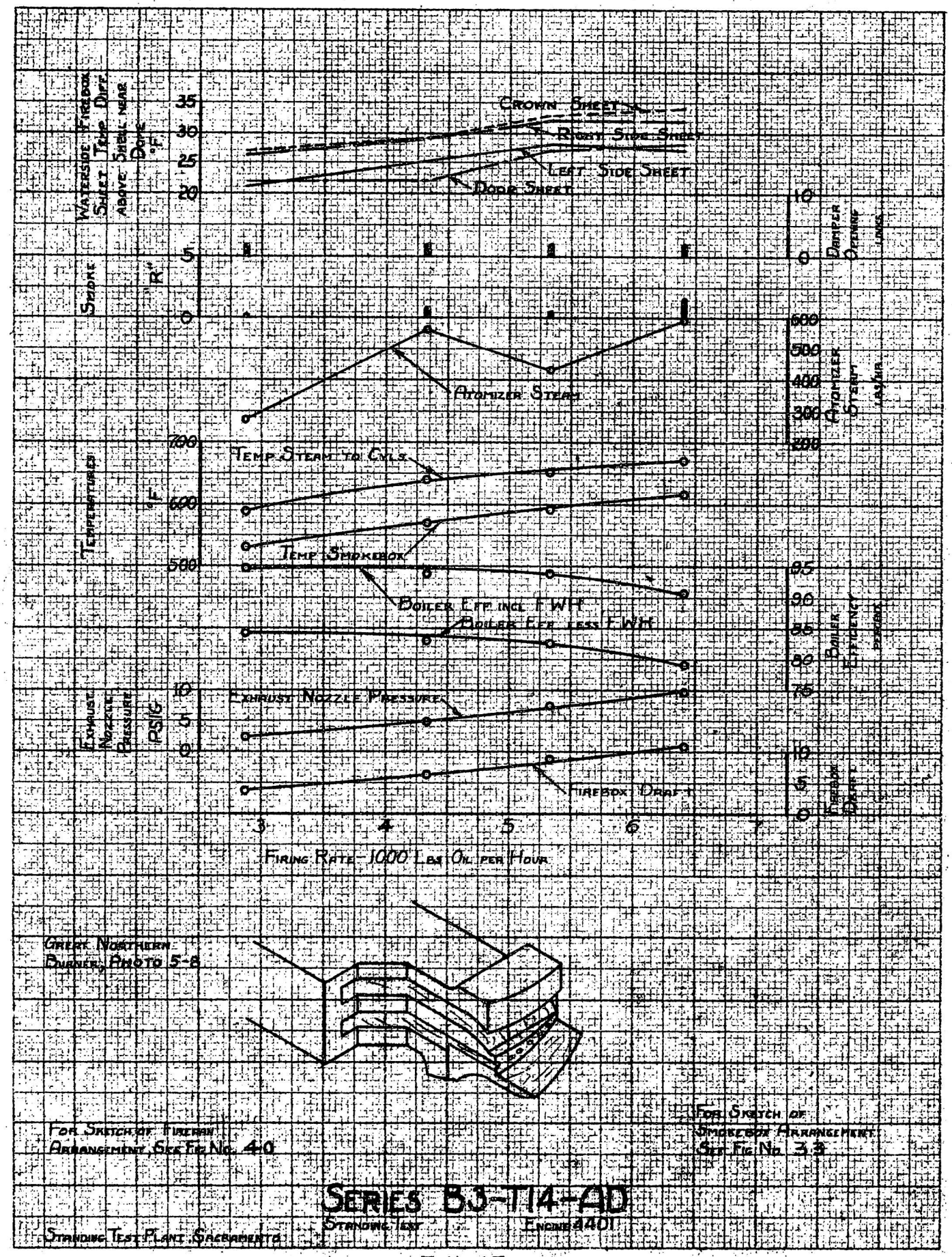


Great Northern Burner, Photo 5-8



For Sketch of Firebox Arrangement, See Fig. No. 40

For Sketch of Smokebox Arrangement, See Fig. No. 33

# Series B3-T14-AD

Standing Test Engine 4401

Standing Test Plant, Sacramento

Fig. No. 15

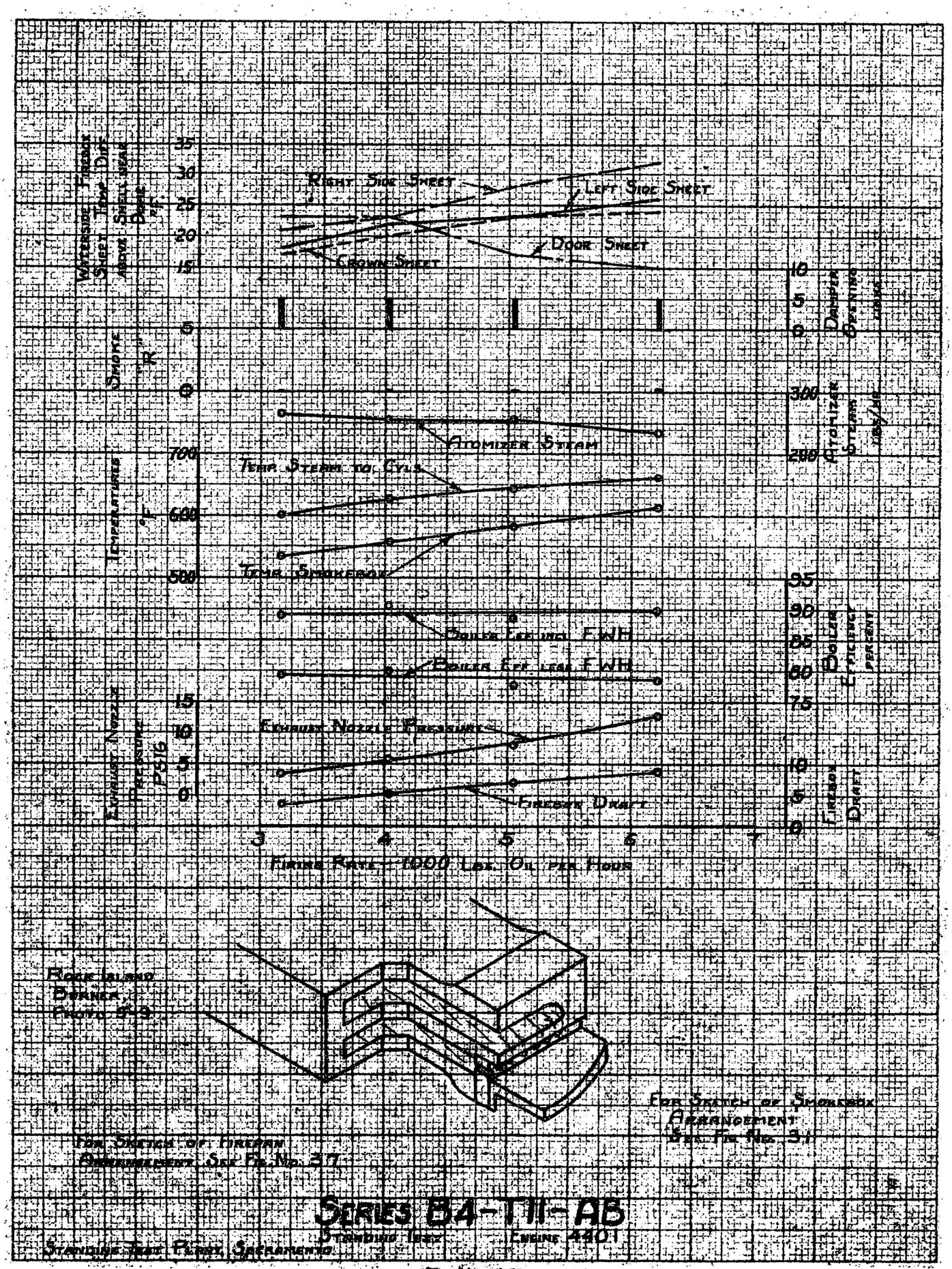


Rock Island Burner, Photo 5-9

For Sketch of Firebox Arrangement See Fig. No. 37

For Sketch of Smokebox Arrangement See Fig. No. 31

# Series B4-T11-AB

Standing Test — Engine 4401

Standing Test Plant, Sacramento

Fig. No. 16

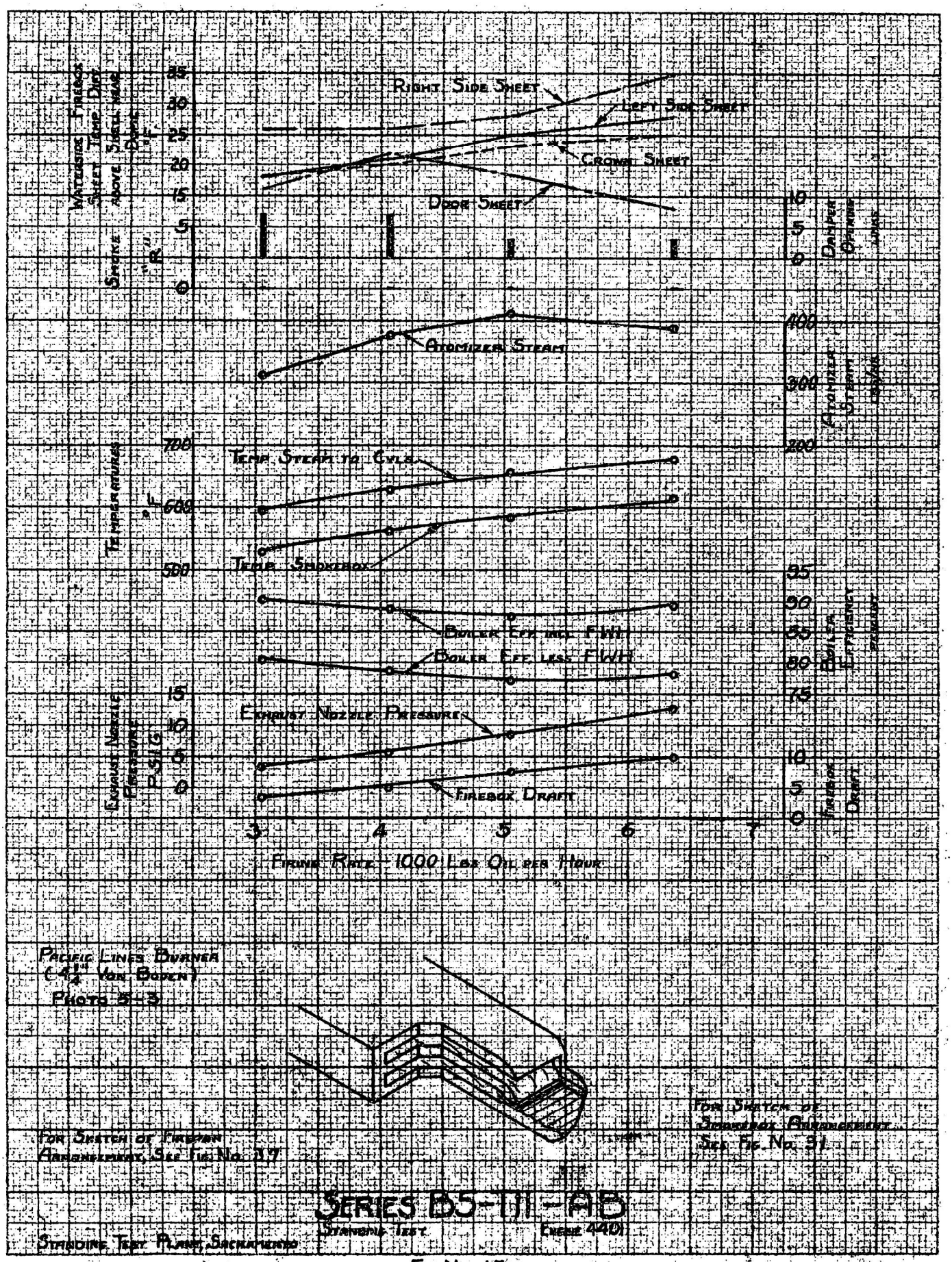
Waterside Firebox Sheet Temp Dist Above Sheet Near Door °F
Smoke "R"
Right Side Sheet
Left Side Sheet
Crown Sheet
Door Sheet
Damper Opening Inch
Atomizer Steam
Atomizer Steam Pressure
Temperatures °F
Temp. Steam to Cyls.
Temp. Smokebox
Boiler Eff. incl. FWH
Boiler Eff. less FWH
Boiler Efficiency Percent
Exhaust Nozzle Pressure P.S.I.G.
Exhaust Nozzle Pressure
Firebox Draft
Firebox Draft
Firing Rate - 1000 Lbs Oil per Hour
Pacific Lines Burner
(4 1/4" Von Boden)
Photo 5-3
For Sketch of Firebox Arrangement, See Fig. No. 37
For Sketch of Smokebox Arrangement See Fig. No. 31
Series D5-111-AB
Standing Test
Engine 4401
Standing Test Plant, Sacramento

Fig. No. 17

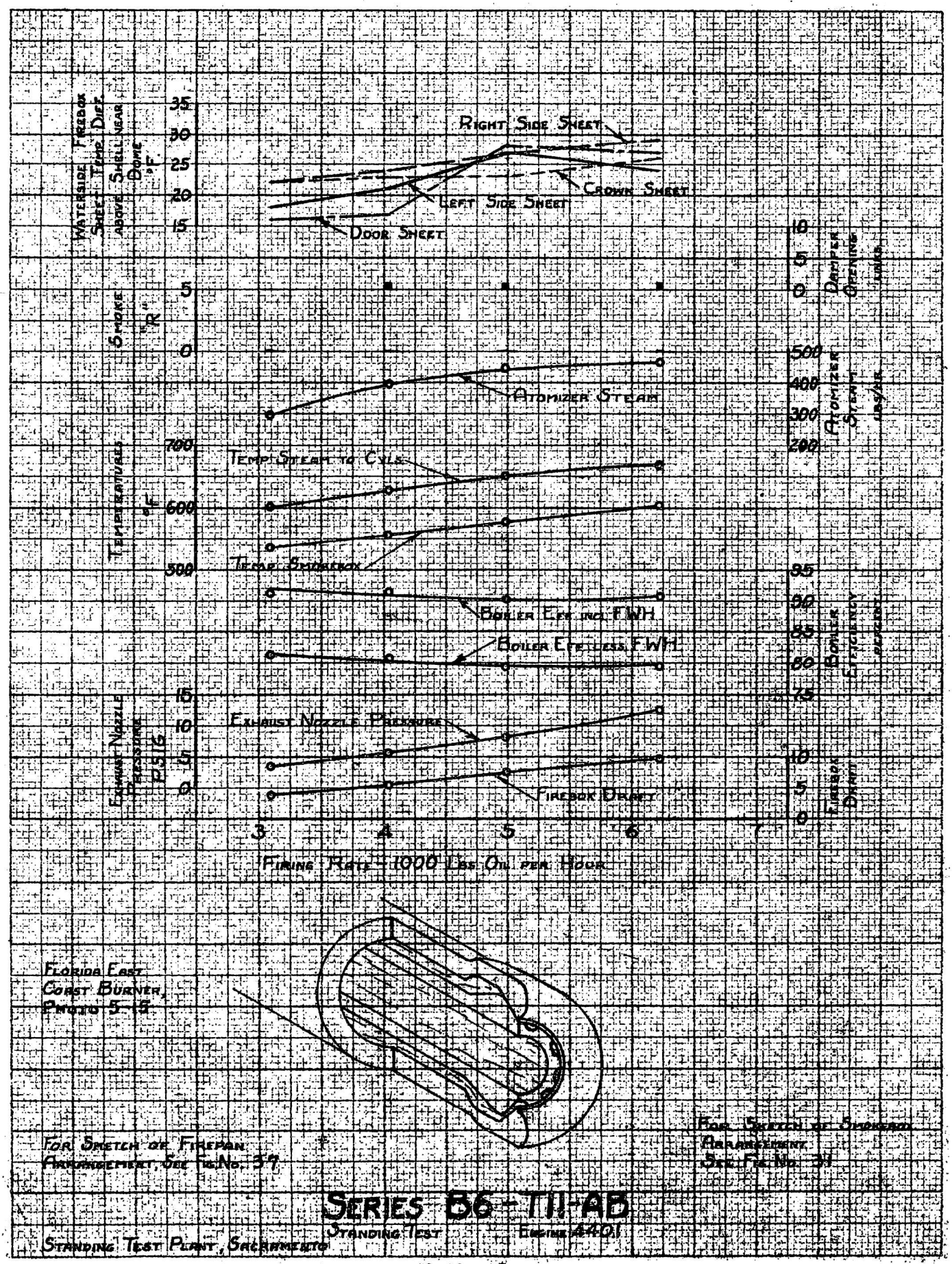
Waterside Sheet Firebox Temp. Diff.
Smoke Above Shell Near Dome °F.
35
30
25
20
15
5
0
Right Side Sheet
Crown Sheet
Left Side Sheet
Door Sheet
Temperatures °F
700
600
500
Atomizer Steam
Temp. Steam to Cyl.
Temp. Smokebox
Boiler Eff. incl. F.W.H.
Boiler Eff. less F.W.H.
Exhaust Nozzle Pressure PSIG
15
10
5
0
Exhaust Nozzle Pressure
Firebox Draft
3
4
5
6
7
Firing Rate - 1000 Lbs. Oil per Hour
Damper Opening Inches
10
5
0
Atomizer Steam Lbs/Hr.
500
400
300
200
Boiler Efficiency Percent
95
90
85
80
75
Firebox Draft
10
5
0
Florida East Coast Burner, Photo 5-19
For Sketch of Firepan Arrangement, See Fig. No. 39
For Sketch of Smokebox Arrangement See Fig. No. 31
Series 56-T11-AB
Standing Test
Engine 4401
Standing Test Plant, Sacramento

Fig. No. 18

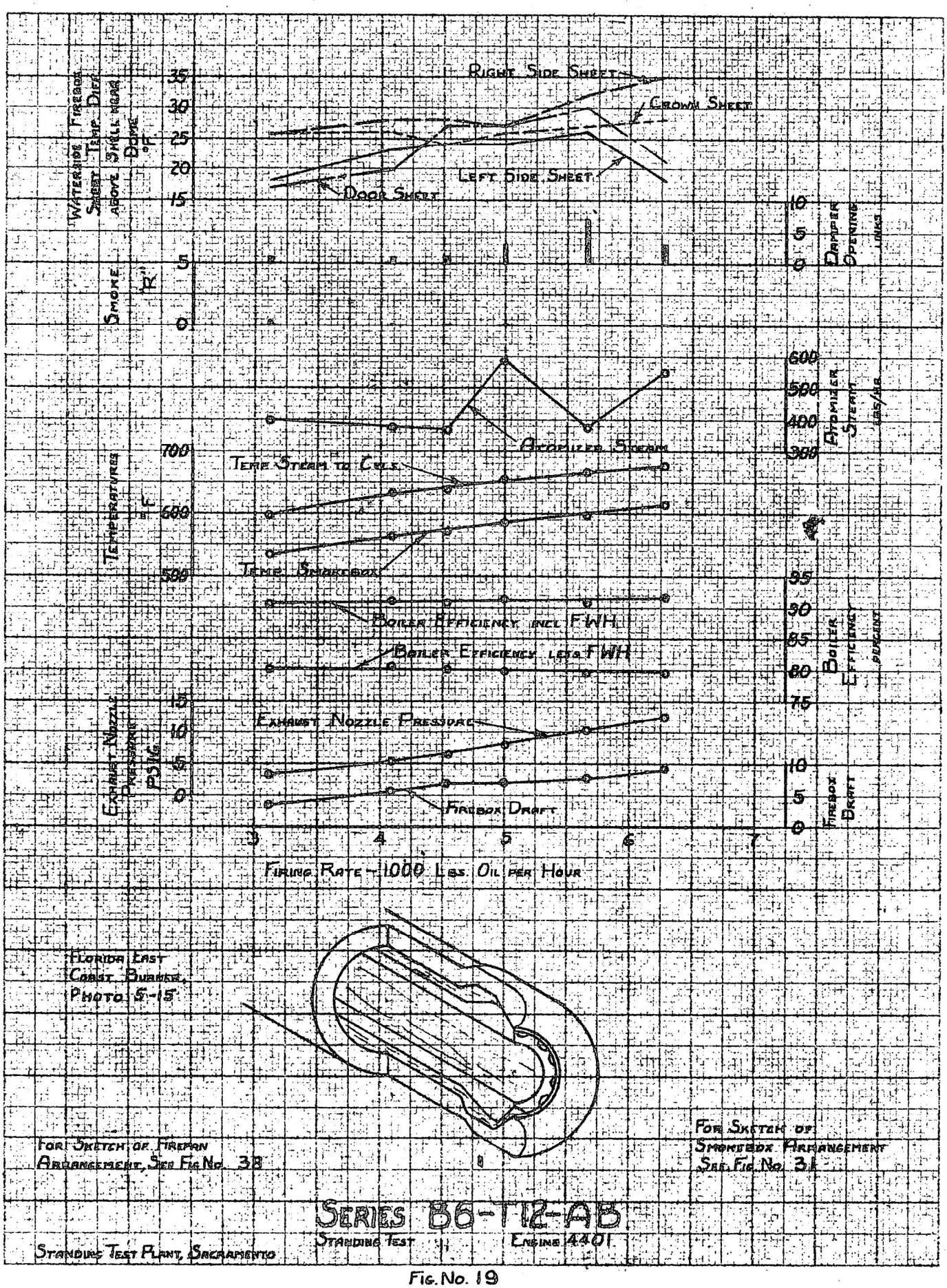
Waterside Firebox Sheet Temp. Diff. Above Shell Head Dome °F
Smoke "R"
Temperatures °F
Exhaust Nozzle Pressure PSIG
Right Side Sheet
Crown Sheet
Left Side Sheet
Door Sheet
Damper Opening Inches
Atomizer Steam Lbs/Hr
Atomizer Steam
Temp Steam to Cyls.
Temp. Smokebox
Boiler Efficiency incl FWH
Boiler Efficiency less FWH
Boiler Efficiency Percent
Exhaust Nozzle Pressure
Firebox Draft
Firing Rate - 1000 Lbs. Oil per Hour
Florida East Coast Burner, Photo 5-15
For Sketch of Firepan Arrangement, See Fig. No. 38
For Sketch of Smokebox Arrangement See Fig. No. 31
Series B6-T12-AB
Standing Test
Engine 4401
Standing Test Plant, Sacramento

Fig. No. 19

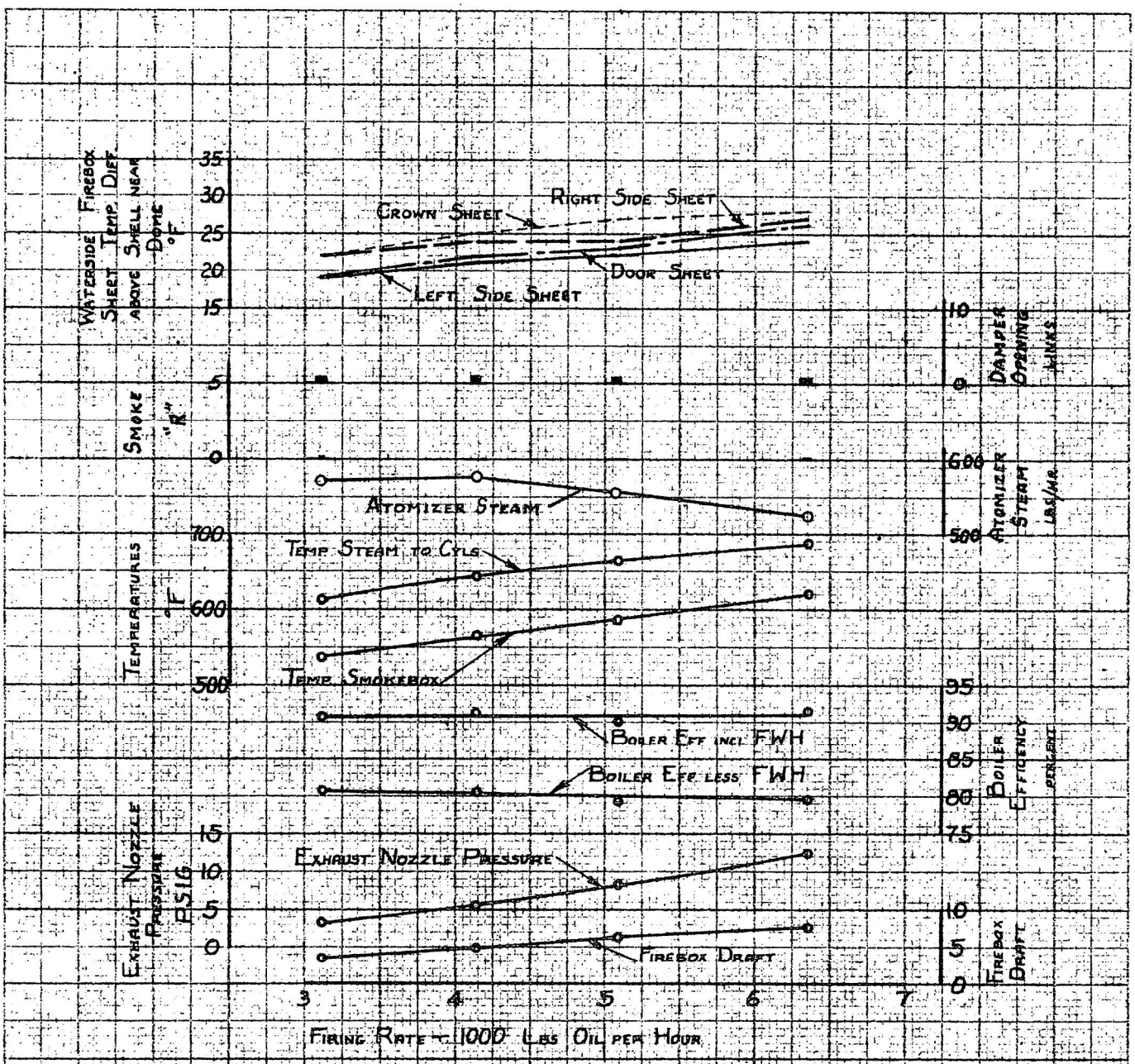


Florida East Coast Burner, Photo 5-15

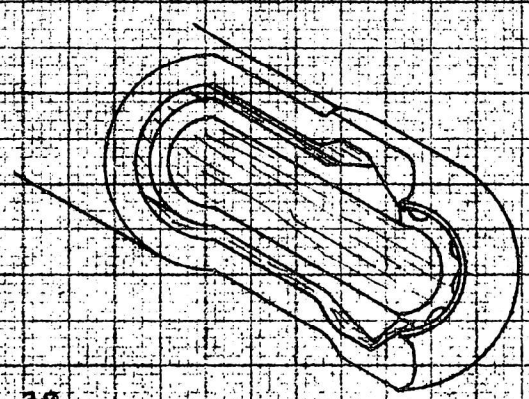

For Sketch of Firepan Arrangement See Fig. No. 39

For Sketch of Smokebox Arrangement See Fig. No. 31

SERIES B6-T13-AB

Standing Test Engine 4401

Standing Test Plant, Sacramento

Fig. No. 20

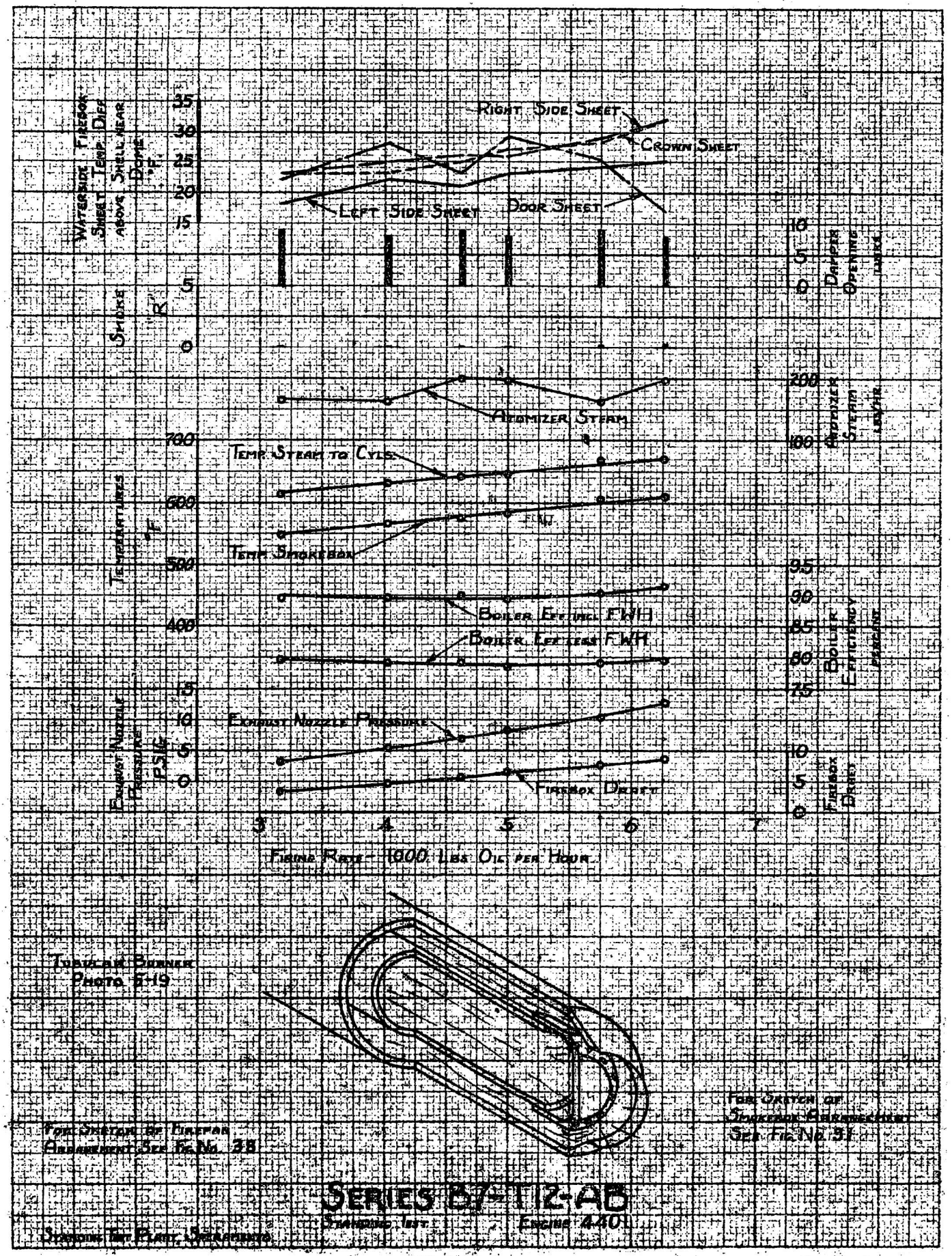
Waterside Firebox Sheet Temp Diff Above Shell Near Dome °F
35
30
25
20
15
Right Side Sheet
Crown Sheet
Left Side Sheet
Door Sheet
Smoke °R
5
0
Dampers Opening Inches
10
5
0
Atomizer Steam
200
100
Atomizer Steam Lb/Hr
Temperatures °F
700
600
500
400
Temp Steam to Cyls.
F.W.
Temp Smokebox
Boiler Eff. Incl. F.W.H.
Boiler Eff. Less F.W.H.
Boiler Efficiency Percent
95
90
85
80
75
Exhaust Nozzle Pressure PSIG
15
10
5
0
Exhaust Nozzle Pressure
Firebox Draft
Firebox Draft
10
5
0
3
4
5
6
7
Firing Rate - 1000 Lbs Oil per Hour
Turbular Burner
Photo 5-19
For Sketch of Firebox Arrangement See Fig. No. 38
For Sketch of Smokebox Arrangement See Fig. No. 31
Series 67-T12-AB
Standing Test
Engine 4401
Standing Test Plant, Chicago

Fig. No. 21

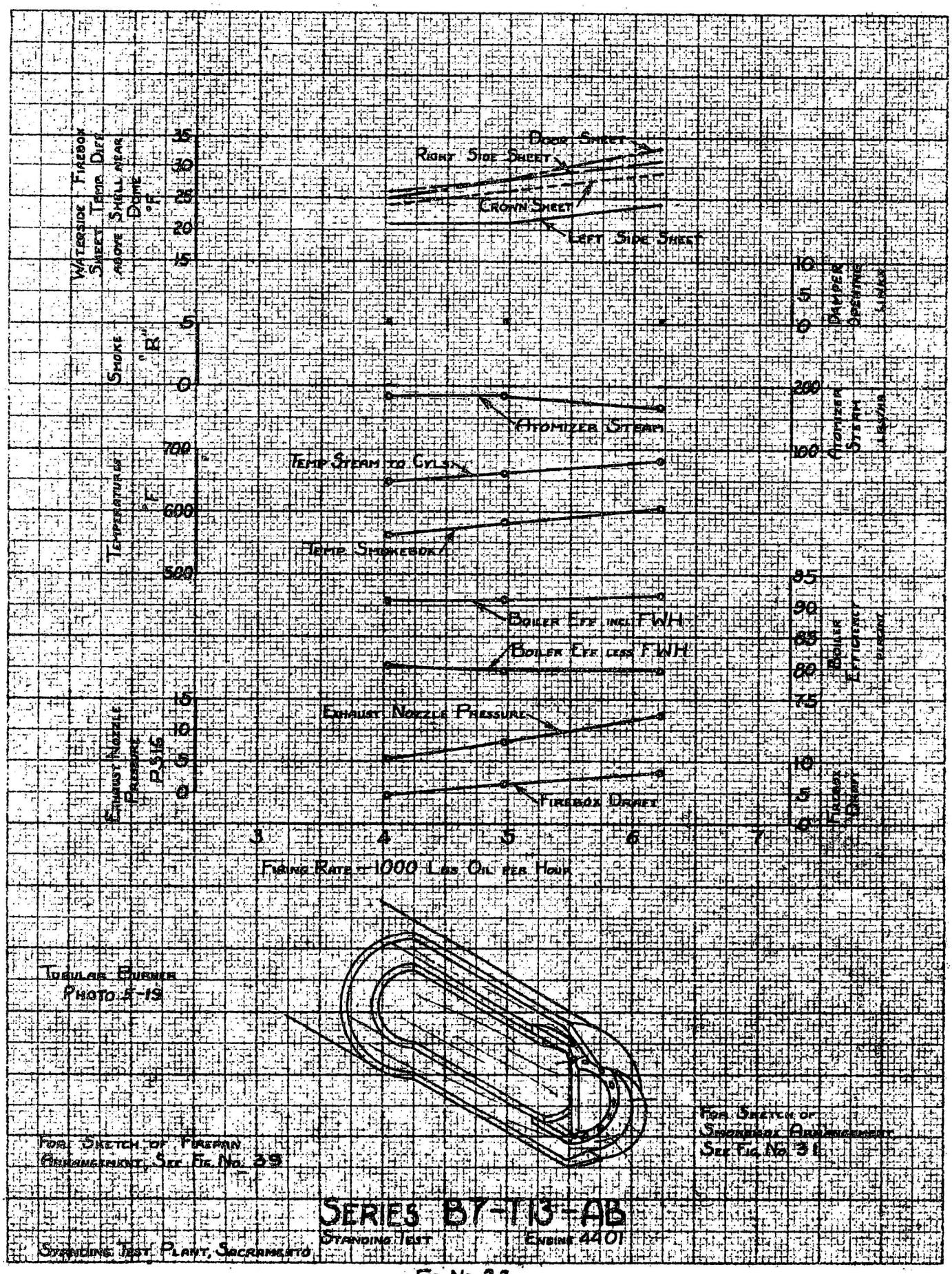
Waterside Firebox Sheet Temp. Dif.
Smoke Shell near Dome °F.
Door Sheet
Right Side Sheet
Crown Sheet
Left Side Sheet
Damper Opening Inches
Atomizer Steam Lbs/hr
Atomizer Steam
Temp Steam to Cyls.
Temperature °F
Temp Smokebox
Boiler Eff incl FWH
Boiler Eff less FWH
Boiler Efficiency Percent
Exhaust Nozzle Pressure
Exhaust Nozzle Pressure P.S.I.G.
Firebox Draft
Firebox Draft
Firing Rate = 1000 Lbs Oil per Hour
Tubular Burner
Photo A-19
For Sketch of Fireman Arrangement, See Fig. No. 39
For Sketch of Smokebox Arrangement, See Fig. No. 31
Series B7-T13-AB
Standing Test
Engine 4401
Standing Test Plant, Sacramento

Fig. No. 22

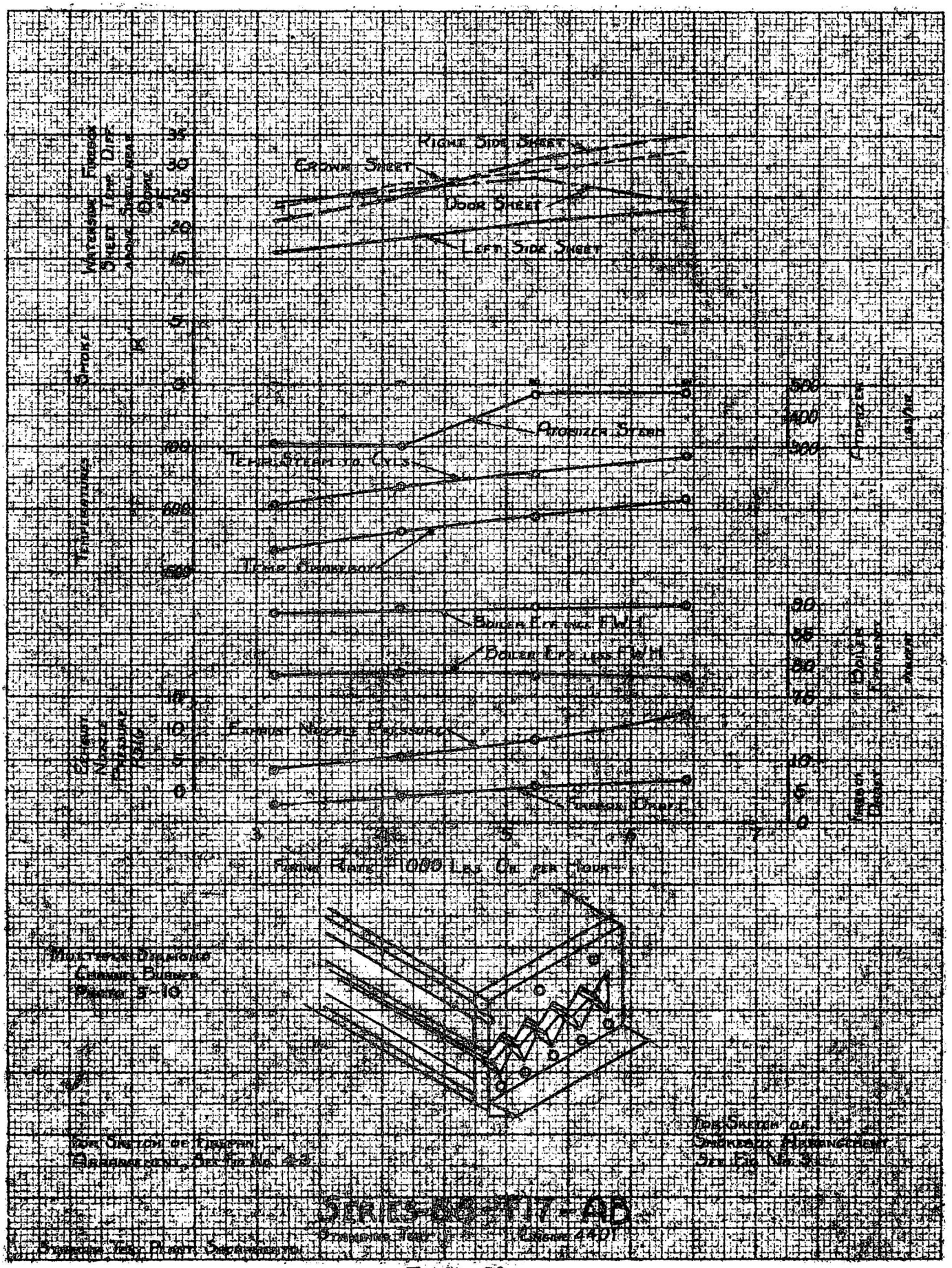
Waterside Firebox Sheet Temp. Diff. Above Shell Near Door
Right Side Sheet
Crown Sheet
Door Sheet
Left Side Sheet
Stroke
Temperatures
Temp. Steam to Cyls.
Atomizer Steam
Temp. Atomizer
Temp. Feedwater
Boiler Eff. incl. F.W.H.
Boiler Eff. less F.W.H.
Boiler Pressure
Exhaust Nozzle Pressure
Firebox Draft
Firing Rate 1000 Lbs. Oil per Hour
Multiple Diaphone Channel Burner Patent 5-10
Top Sketch of Firebox Arrangement, See Fig. No. 22
Top Sketch of Smokebox Arrangement See Fig. No. 31
SERIES-D-17-AB
Standard Test Plant Equipment
Standard Test Engine 4401

Fig. No. 23

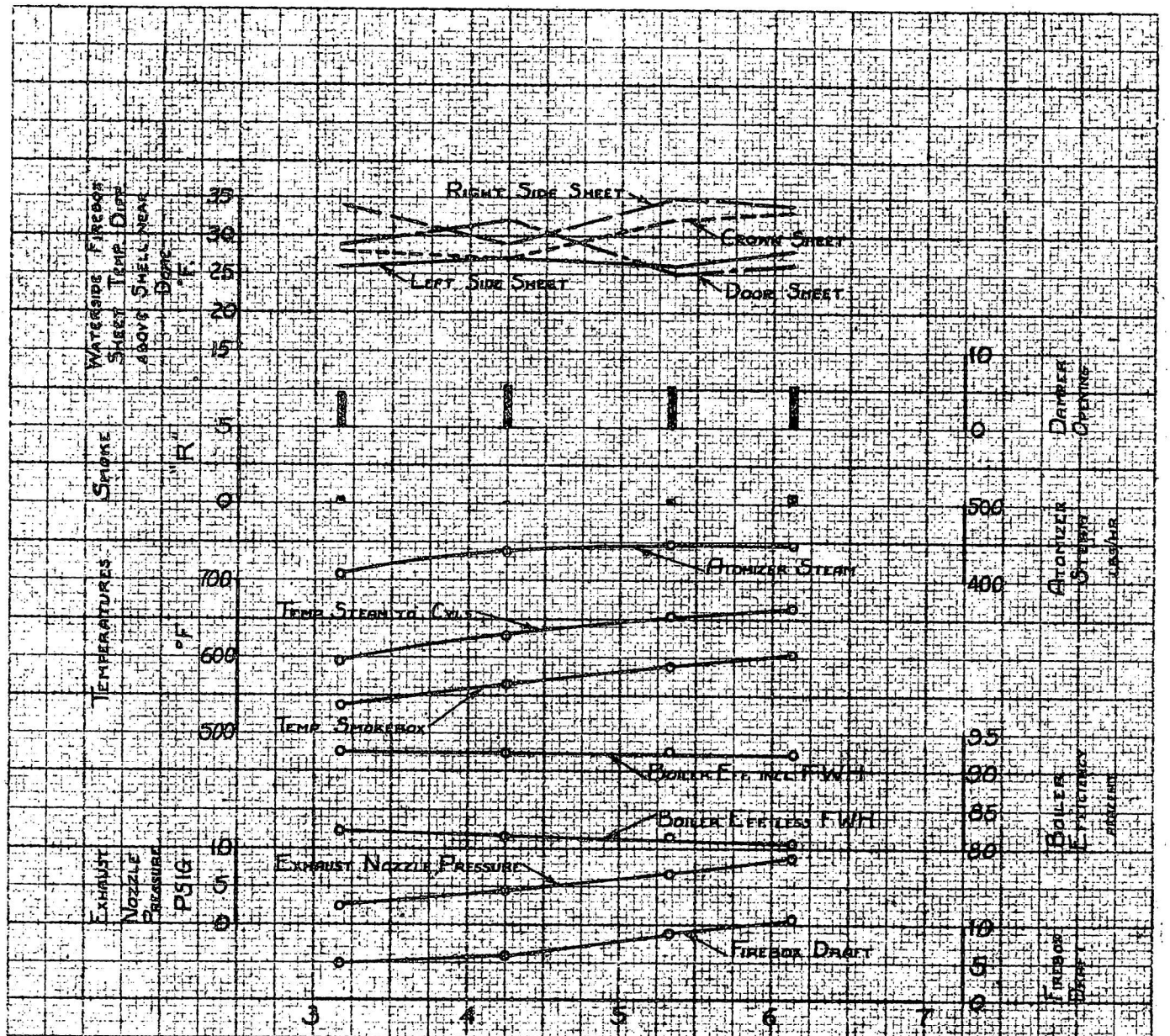


K.O. Alexander Burner
(Rotating Cup)
Photo 5-16

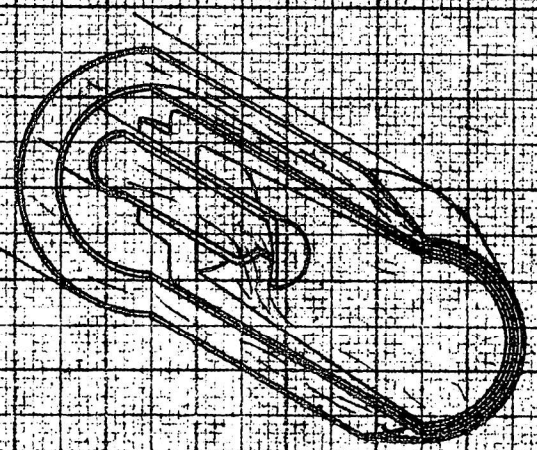

For Sketch of Firepan Arrangement See Fig. No. 41

For Sketch of Smokebox Arrangement See Fig. No. 33

Series 89-T15-AD

Standing Test — Engine 4401

Standing Test Plant Sacramento

Fig No. 24

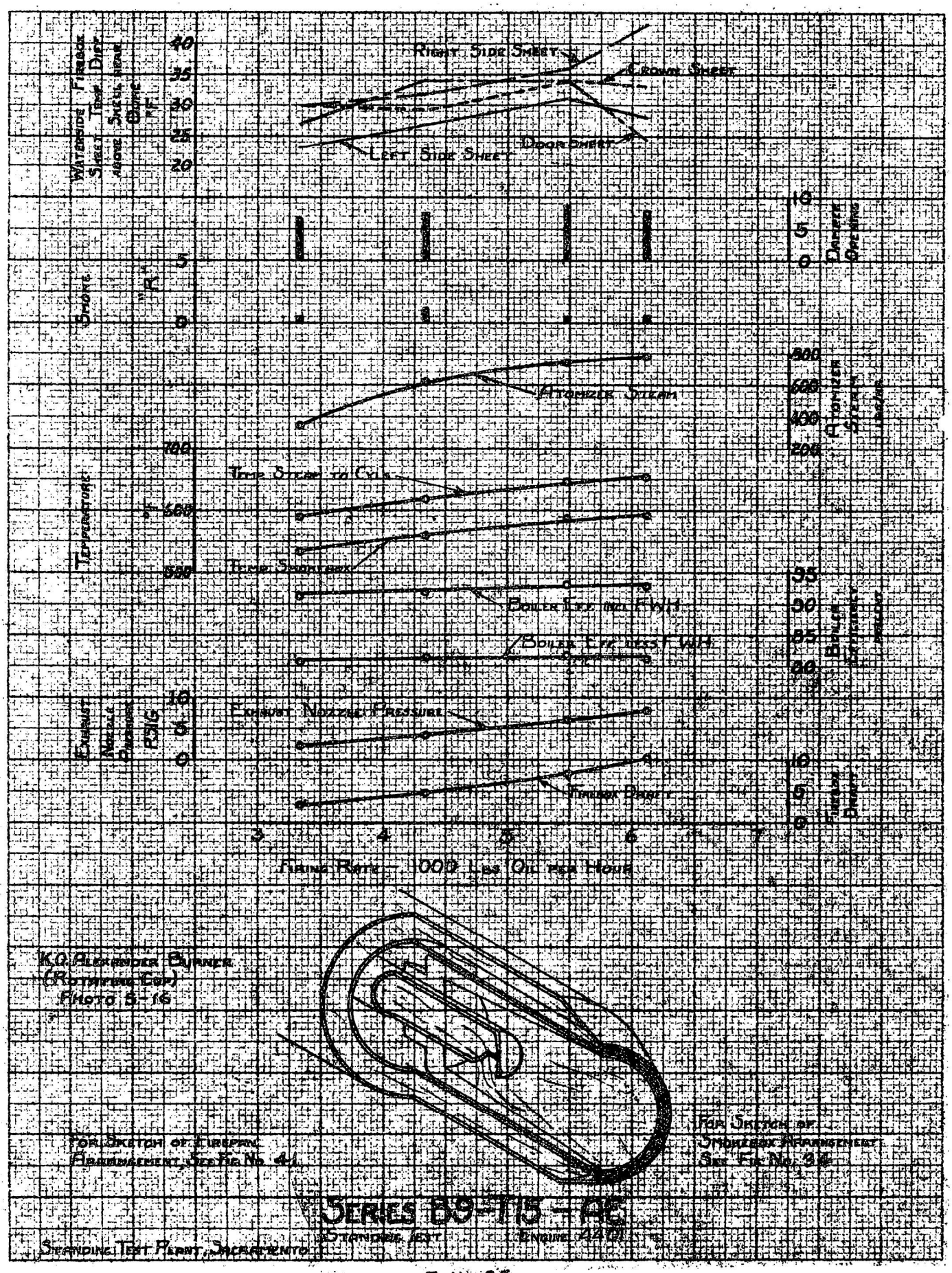
Waterside Firebox Sheet Temp Diff Above Shell Near Outlet °F
Right Side Sheet
Crown Sheet
Left Side Sheet
Door Sheet
Shore "R"
Danger Opening
Atomizer Steam
Temperature °F
Temp Steam to Cyls
Temp Superheat
Atomizer Steam Pressure
Boiler Eff incl F WH
Boiler Eff less F WH
Boiler Efficiency Percent
Exhaust Nozzle Pressure PSIG
Exhaust Nozzle Pressure
Firebox Draft
Firing Rate — 1000 Lbs Oil per Hour
K.O. Alexander Engineer (Rotarians Corp) Photo 5-16
For Sketch of Firebox Arrangement, See Fig. No. 41
For Sketch of Smokebox Arrangement See Fig. No. 36
Series B9-T15-A5
Standing Test
Engine 4401
Standing Test Plant, Sacramento

Fig. No. 25

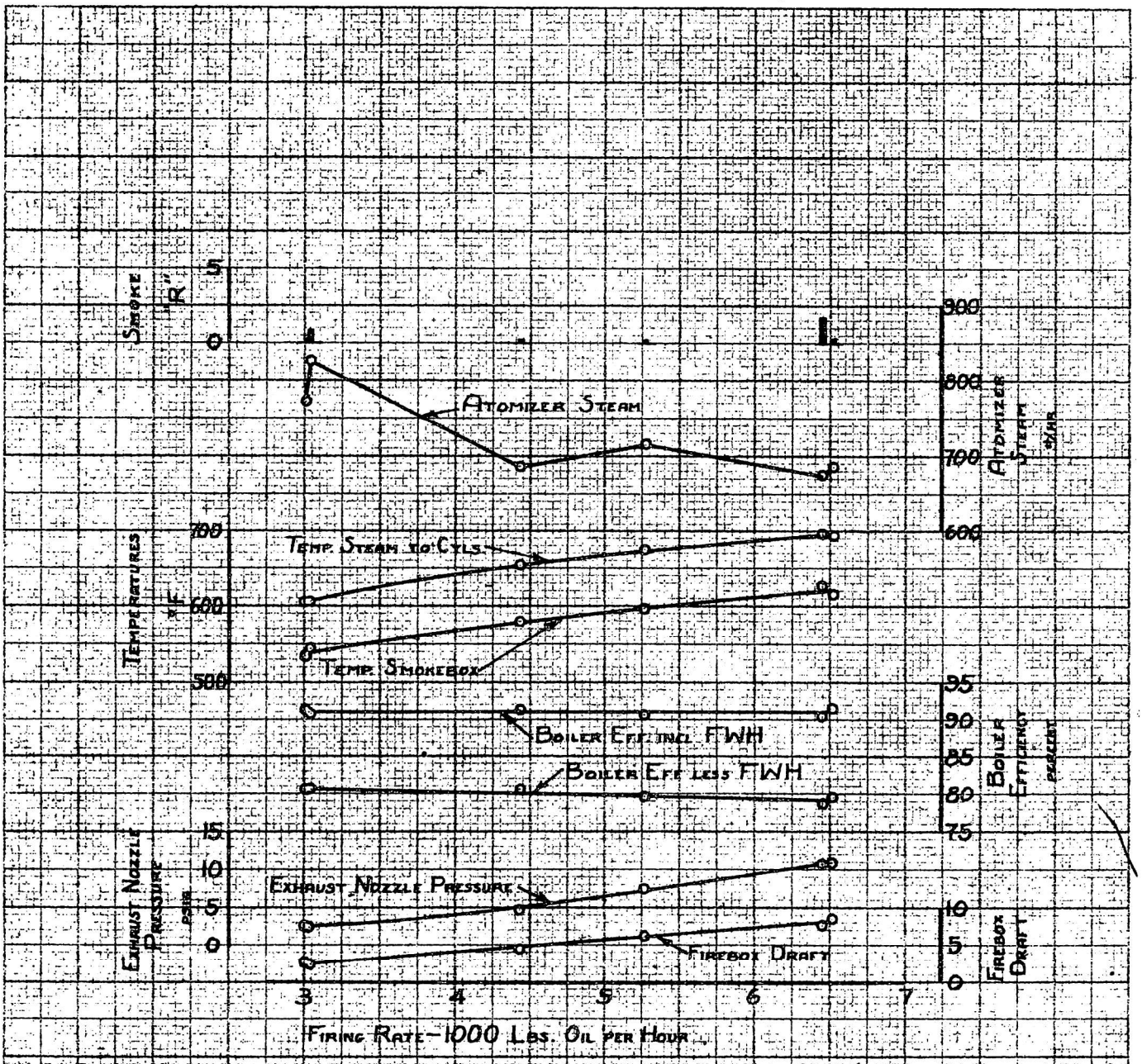


Nagel Burner, Photo 5-20

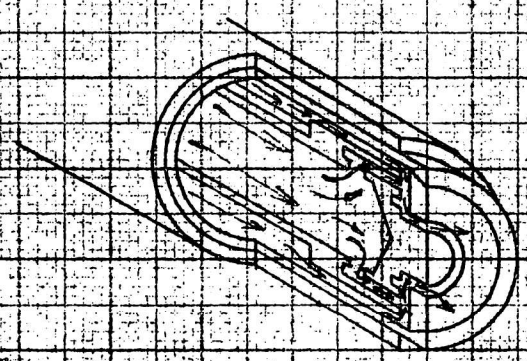

For Sketch of Firepan Arrangement, See Fig. No 44

For Sketch of Smokebox Arrangement See Fig. No 32

# Series B10-T18-AC

Standing Test Engine 4401

Standing Test Plant, Sacramento

Fig No 26

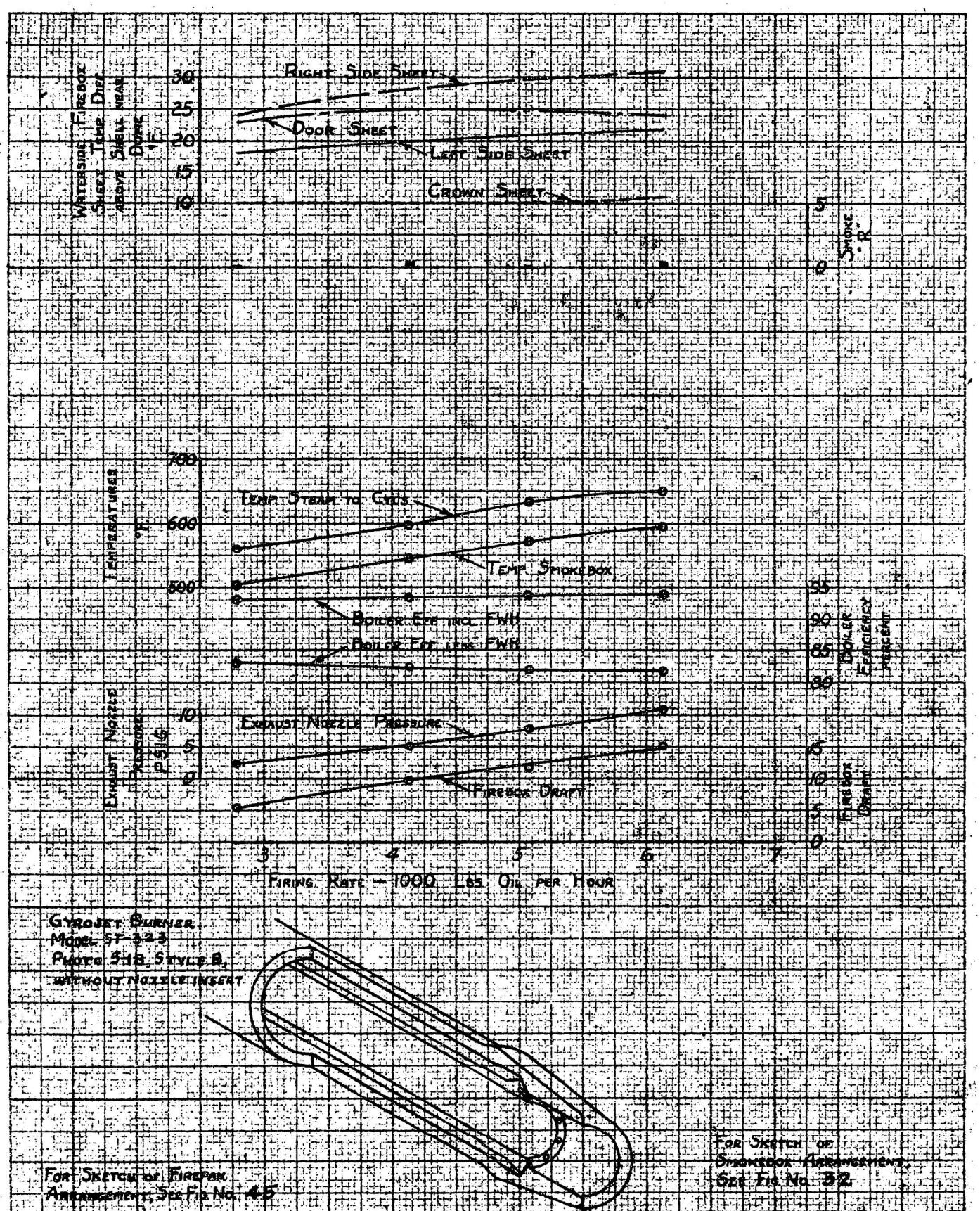
Waterside Firebox Sheet Temp Diff Above Shell Near Dome °F
30
25
20
15
10
Right Side Sheet
Door Sheet
Left Side Sheet
Crown Sheet
Smoke "R"
5
0
Temperatures °F
700
600
500
Temp Steam to Cyls
Temp Smokebox
Boiler Eff incl FWH
Boiler Eff less FWH
Boiler Efficiency Percent
95
90
85
80
Exhaust Nozzle Pressure psig
10
5
0
Exhaust Nozzle Pressure
Firebox Draft
Firebox Draft
15
10
5
0
3
4
5
6
7
Firing Rate — 1000 Lbs. Oil per Hour
Gyrojet Burner
Model ST-323
Photo 5-18, Style B,
without Nozzle Insert
For Sketch of Firepan Arrangement, See Fig. No. 45
For Sketch of Smokebox Arrangement, See Fig. No. 32
Series 511-1119-AC
Standing Test
Engine 4401
Standing Test Plant, Sacramento

Fig. No. 27

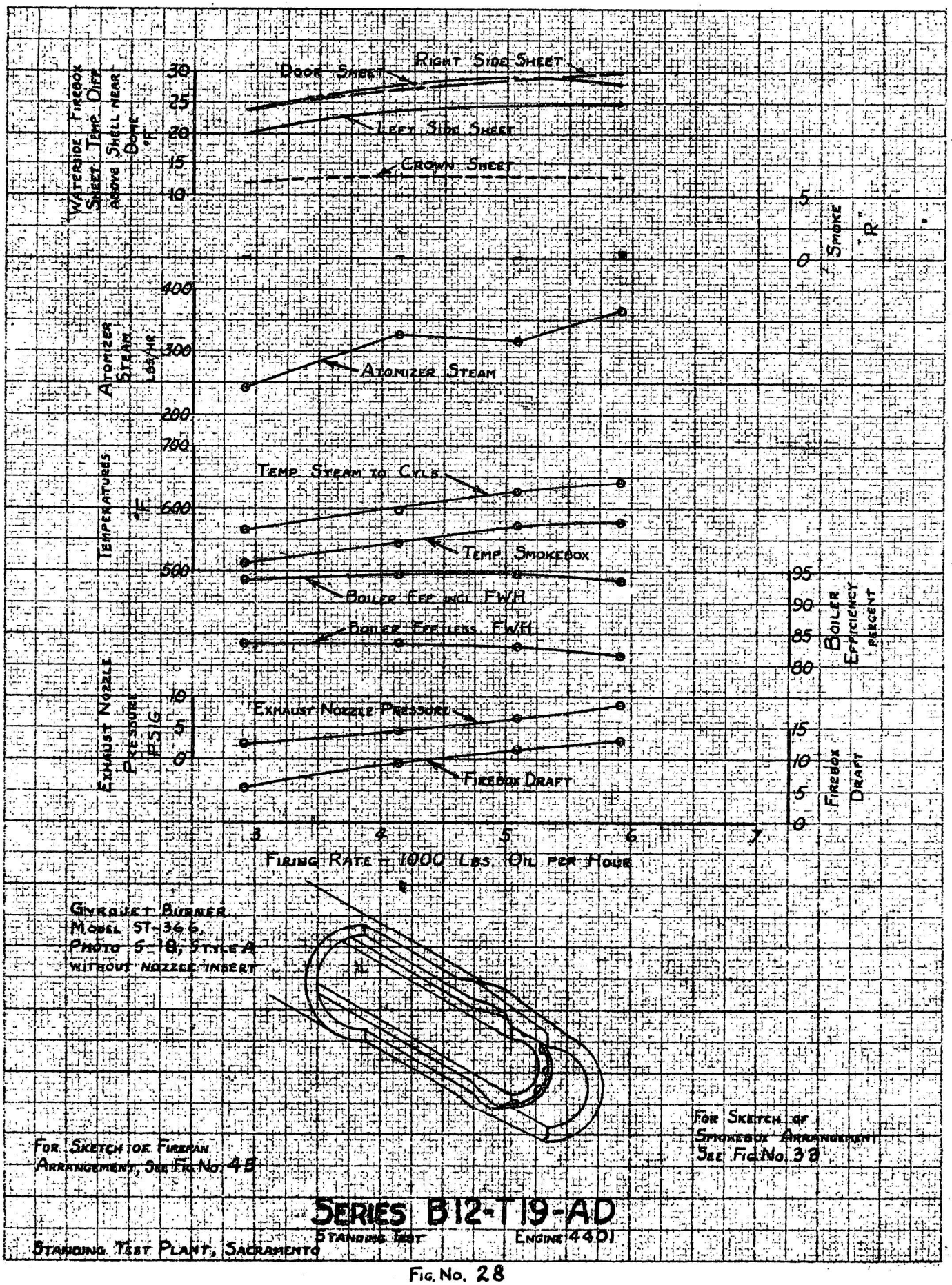


# Series B12-T19-AD

Standing Test — Engine 4401

Standing Test Plant, Sacramento

Fig. No. 28

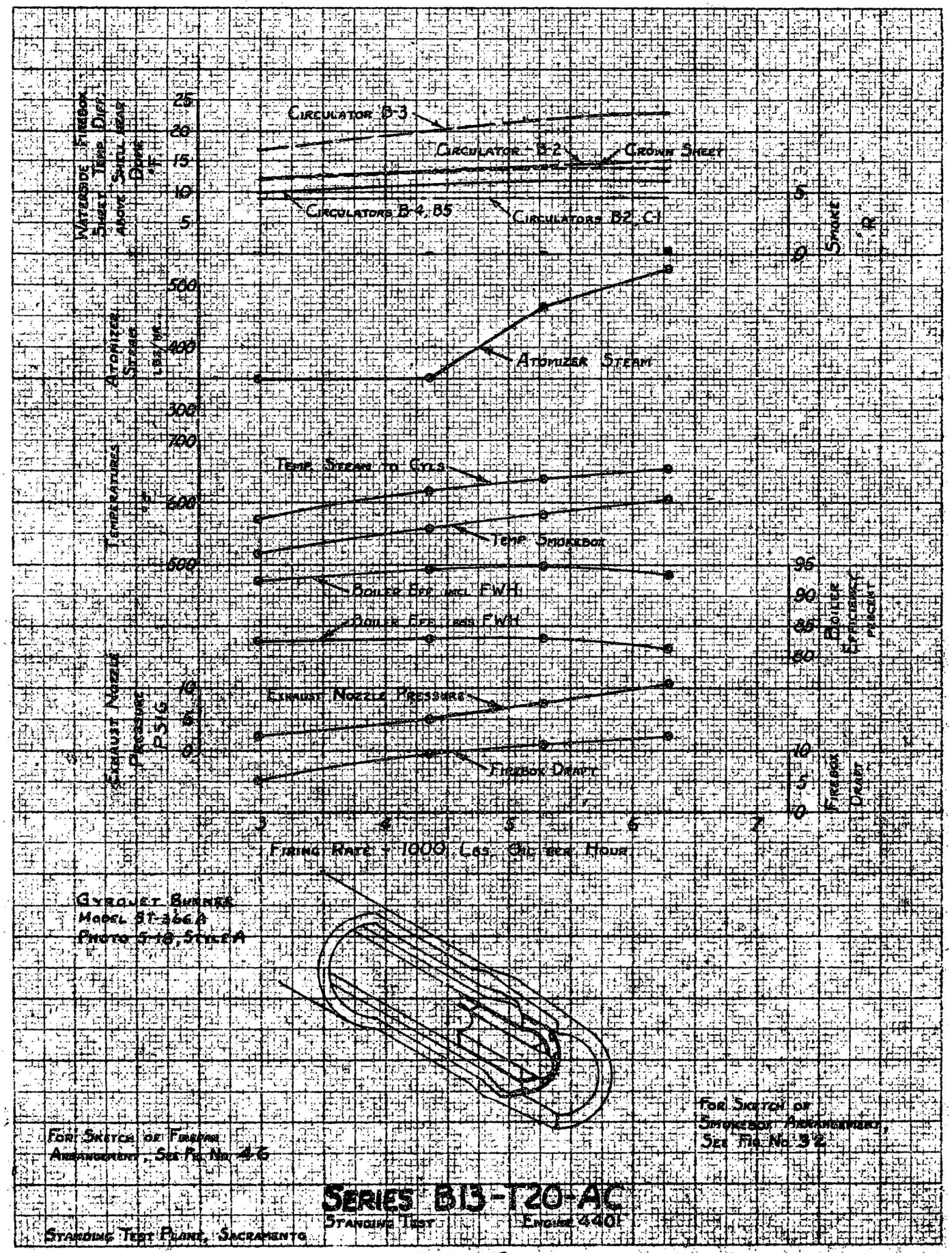


**Series B13-T20-AC**

Standing Test — Engine 4401

Standing Test Plant, Sacramento

Fig. No. 29

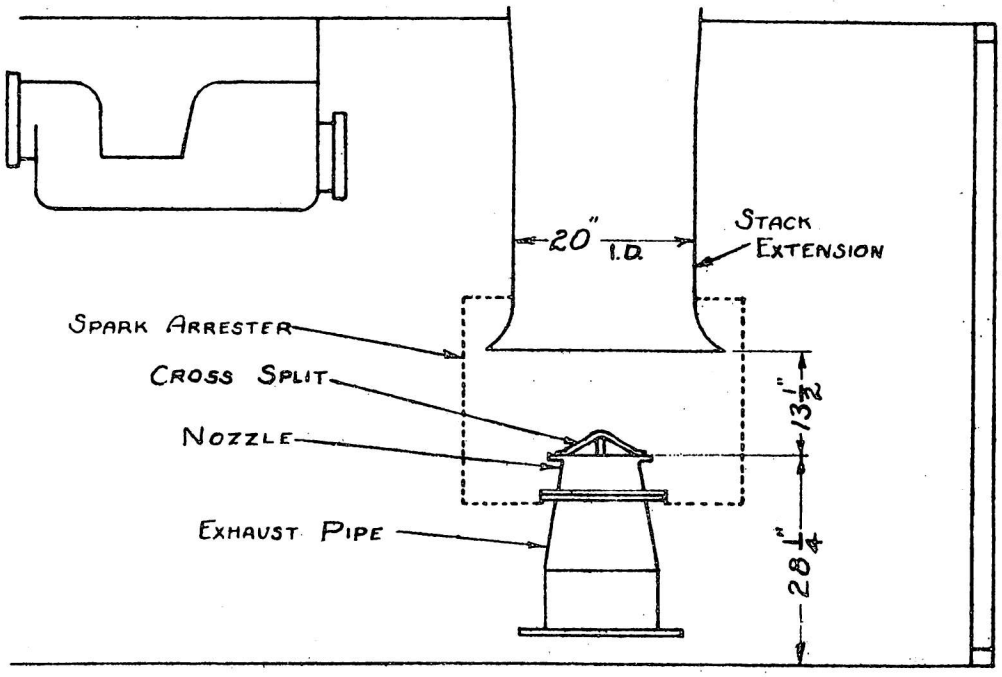


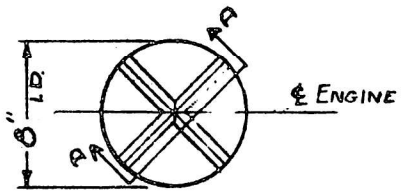


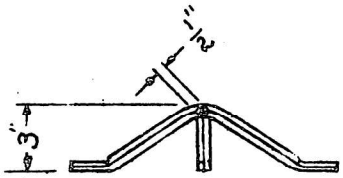


SEC. A-A

DETAIL OF NOZZLE AND CROSS SPLIT

SMOKEBOX ARRANGEMENT - D

STANDING TEST ENGINE 4401

STANDING TEST PLANT, SACRAMENTO

FIG. No. 30

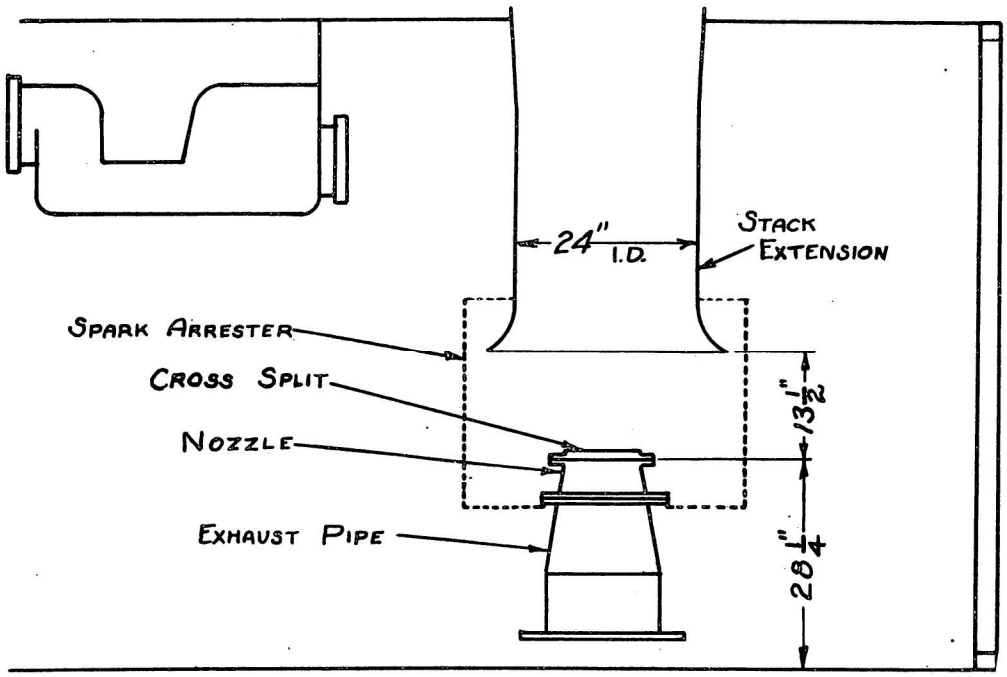


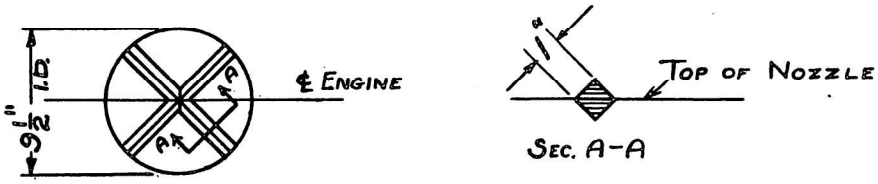


DETAIL OF NOZZLE AND CROSS SPLIT

SMOKEBOX ARRANGEMENT - AB

STANDING TEST ENGINE 4401

STANDING TEST PLANT, SACRAMENTO

FIG. No. 31

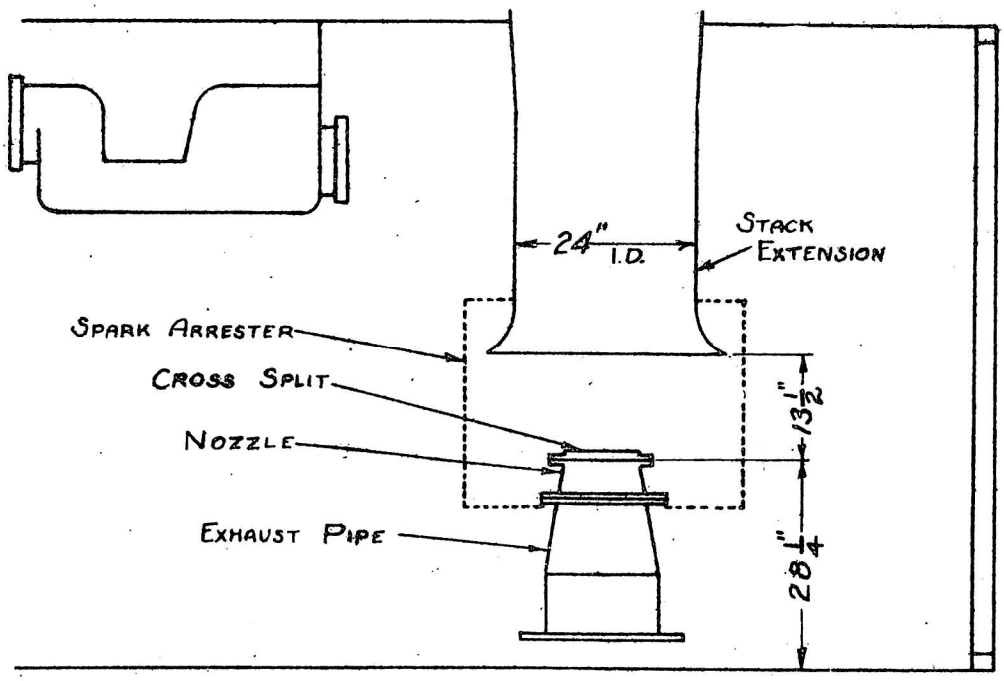



DETAIL OF NOZZLE AND CROSS SPLIT

SMOKEBOX ARRANGEMENT - AC

STANDING TEST ENGINE 4401

STANDING TEST PLANT, SACRAMENTO

FIG. No. 32

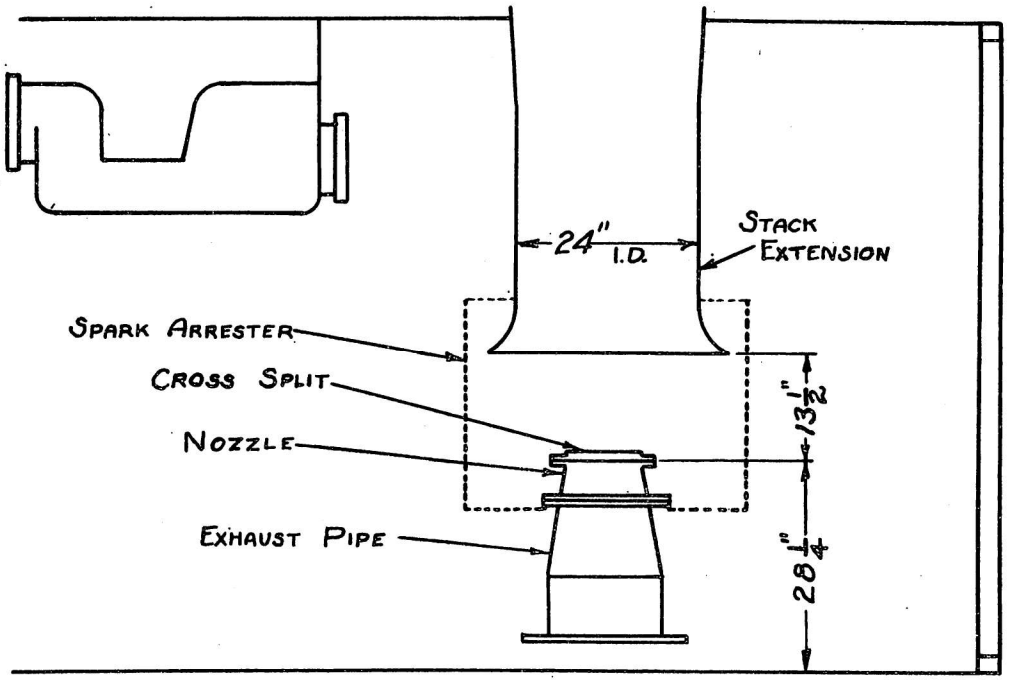



DETAIL OF NOZZLE AND CROSS SPLIT

SMOKEBOX ARRANGEMENT - AD

STANDING TEST ENGINE 4401.

STANDING TEST PLANT, SACRAMENTO

FIG. No. 33

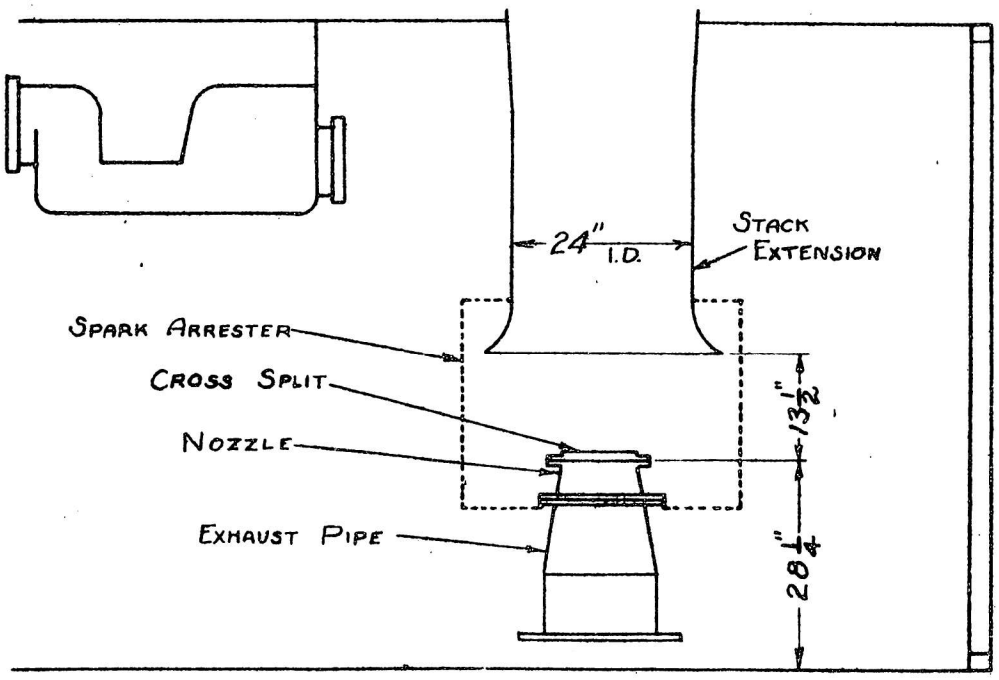


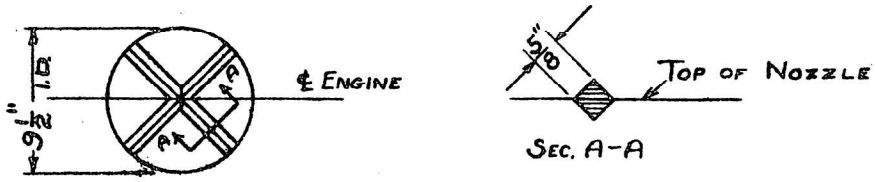


DETAIL OF NOZZLE AND CROSS SPLIT

SMOKEBOX ARRANGEMENT - AE

STANDING TEST ENGINE 4401

STANDING TEST PLANT, SACRAMENTO

FIG. NO. 34

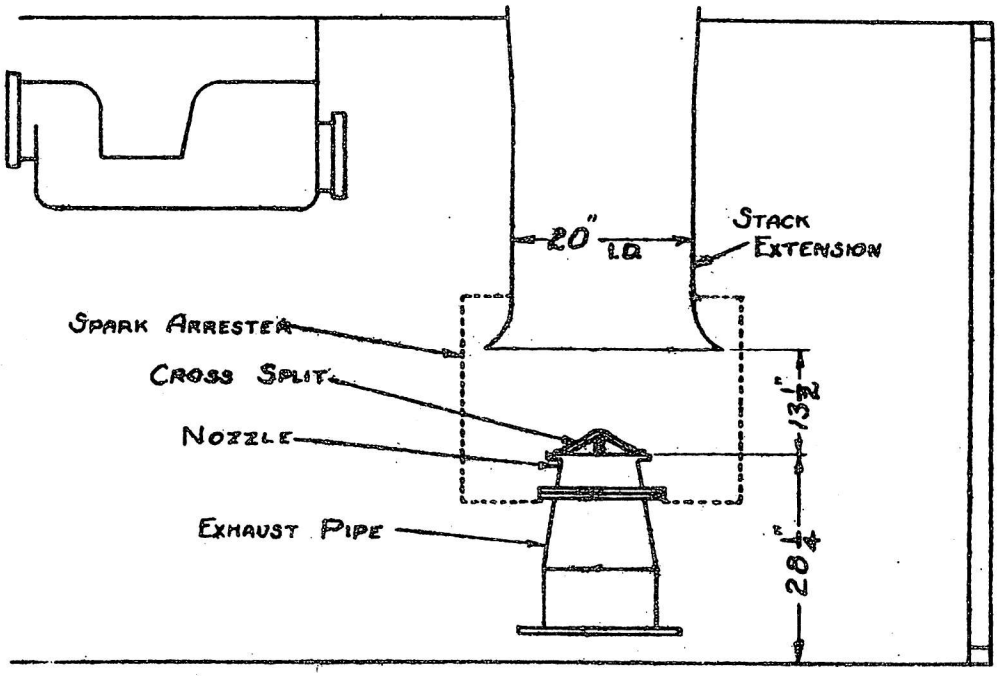


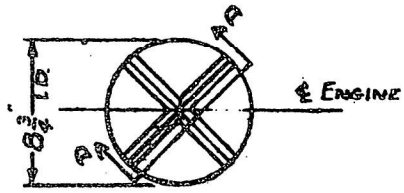


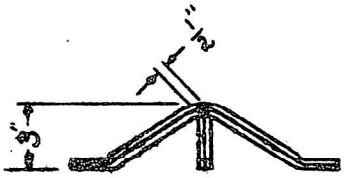


DETAIL OF NOZZLE AND CROSS SPLIT

SMOKEBOX ARRANGEMENT - AF
STANDING TEST ENGINE 4401

STANDING TEST PLANT, SACRAMENTO

FIG. No. 35

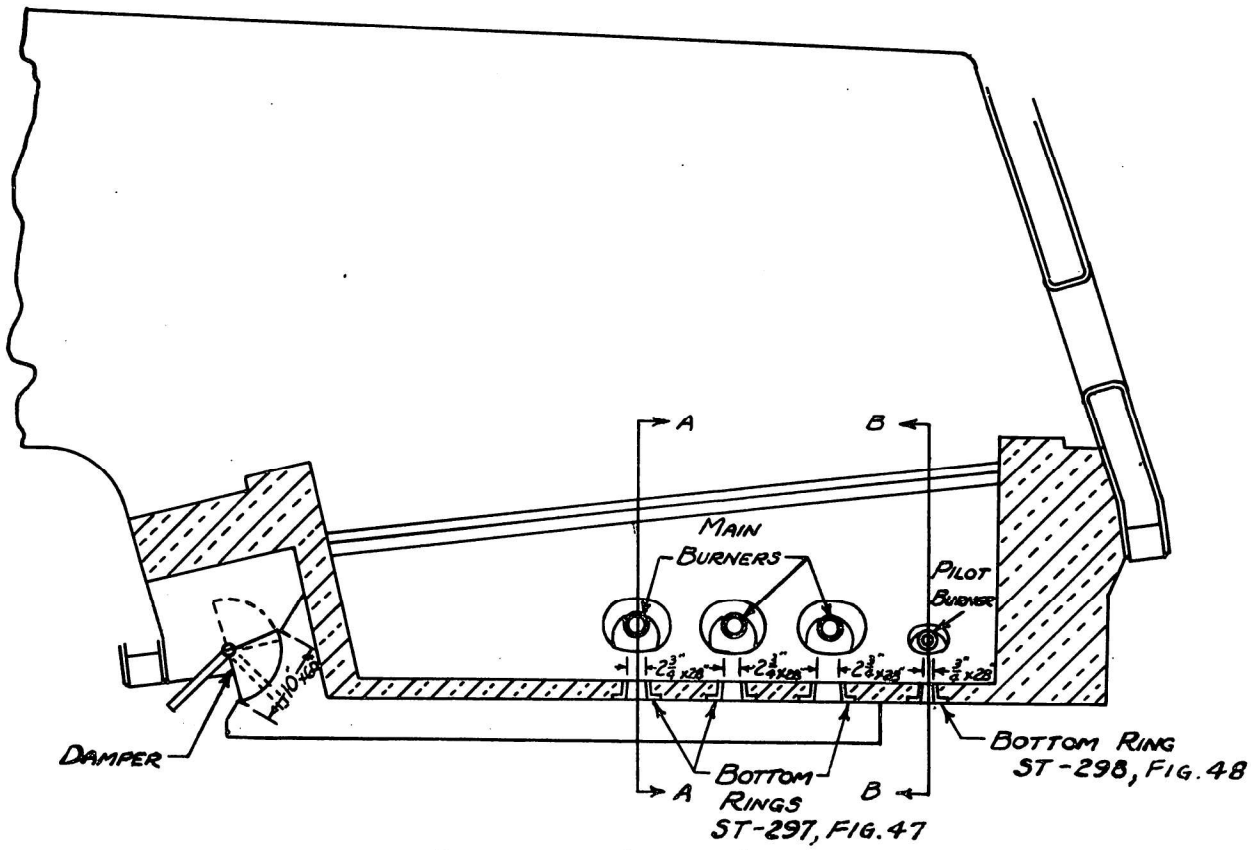


SECTION AT VERTICAL ℄

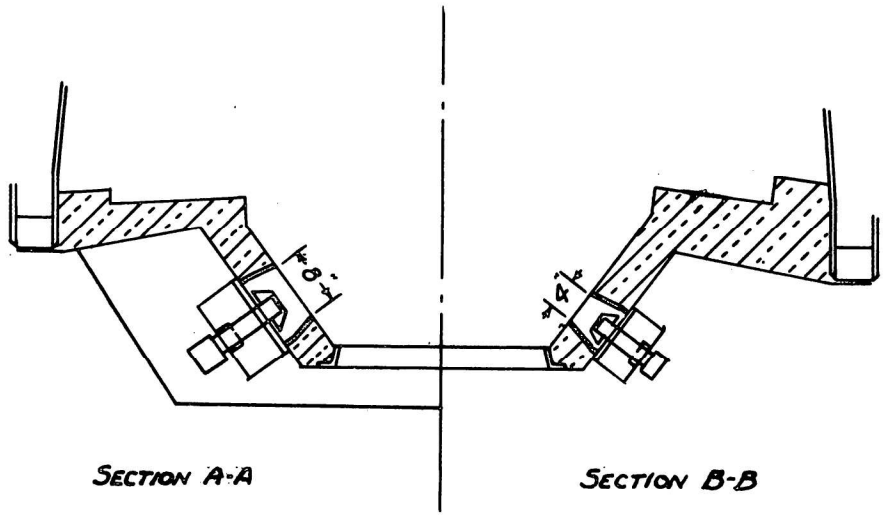


SECTION A-A

SECTION B-B

FIRE PAN ARRANGEMENT, T-10
COEN COMPANY MULTIPLE BURNERS, B-1
STANDING TEST ENGINE 4401

STANDING TEST PLANT, SACRAMENTO

FIG. No. 36

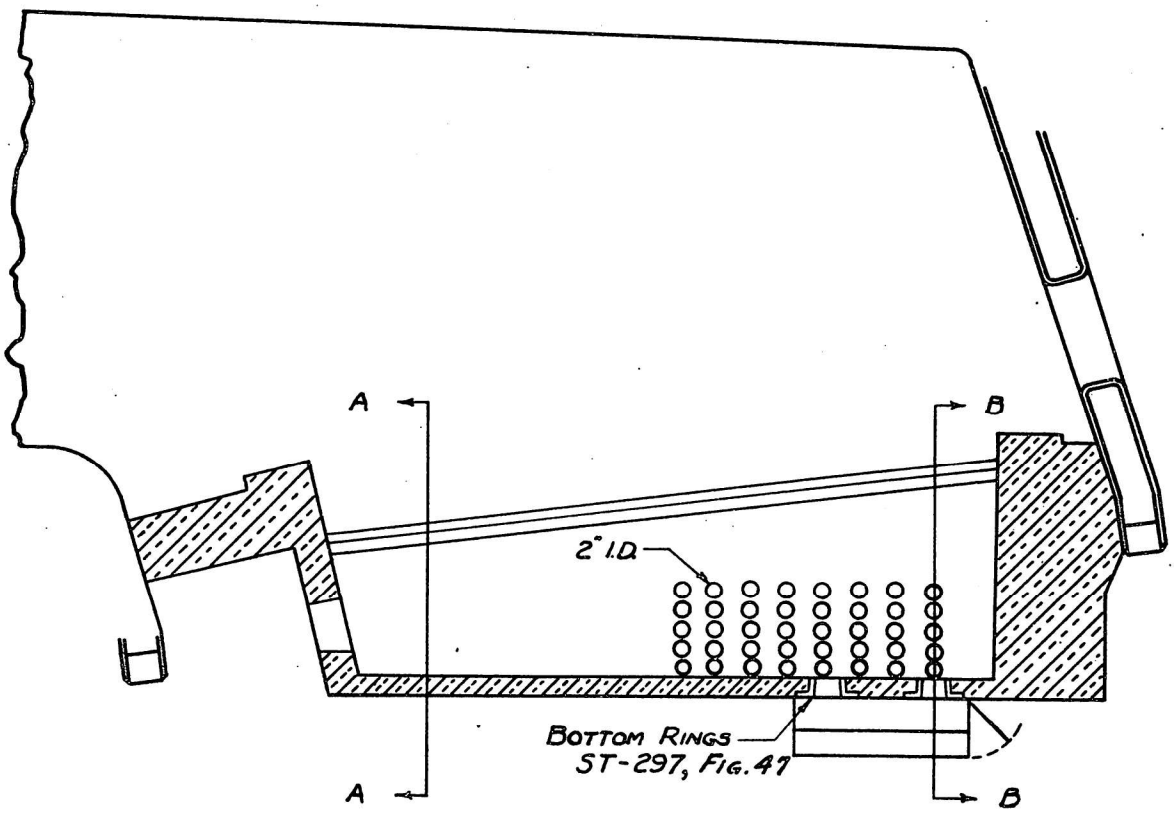


SECTION AT VERTICAL ℄

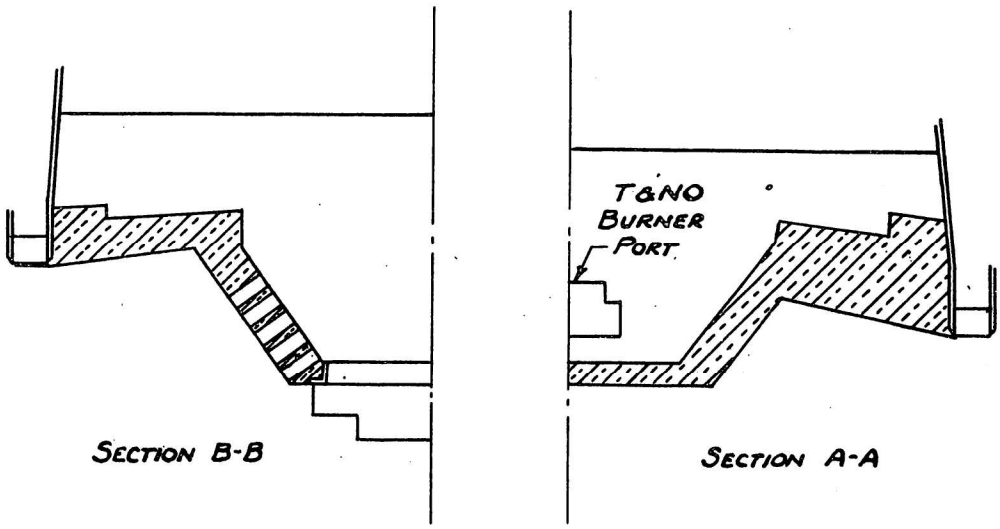


SECTION B-B

SECTION A-A

FIRE PAN ARRANGEMENT, T-11

STANDING TEST PLANT, SACRAMENTO

FIG. No. 37

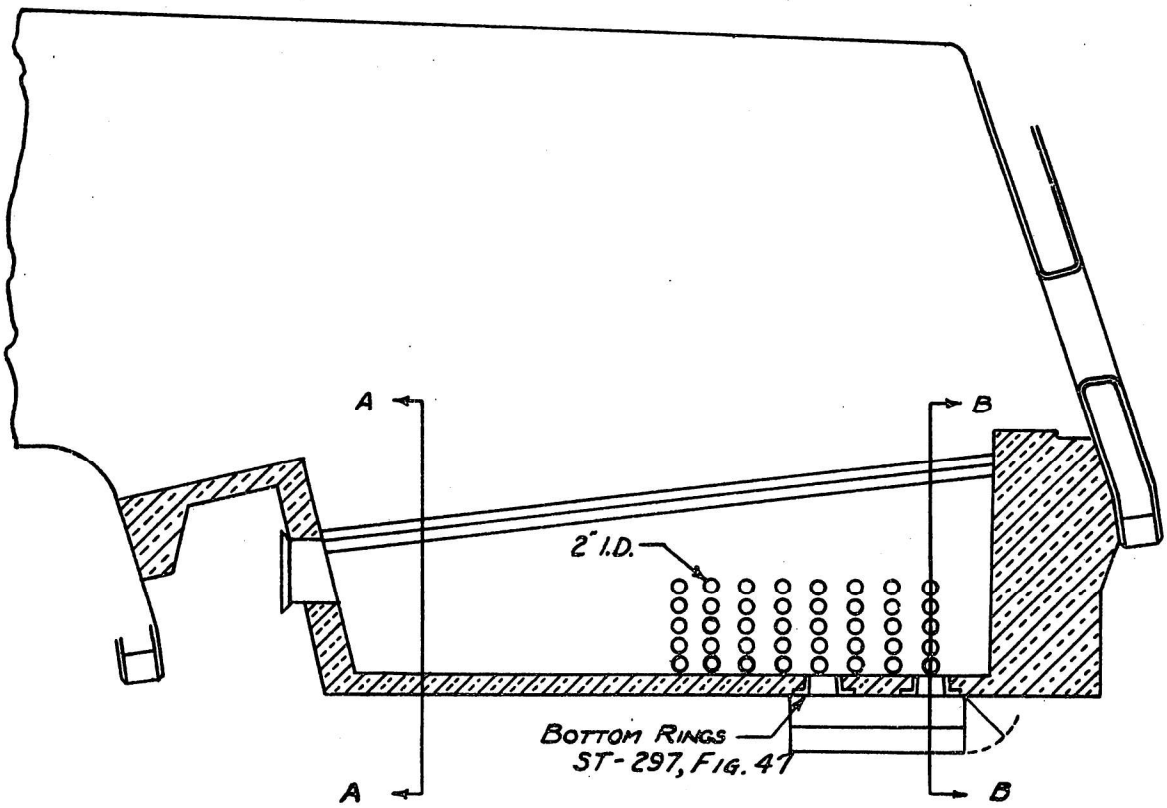


SECTION AT VERTICAL ℄

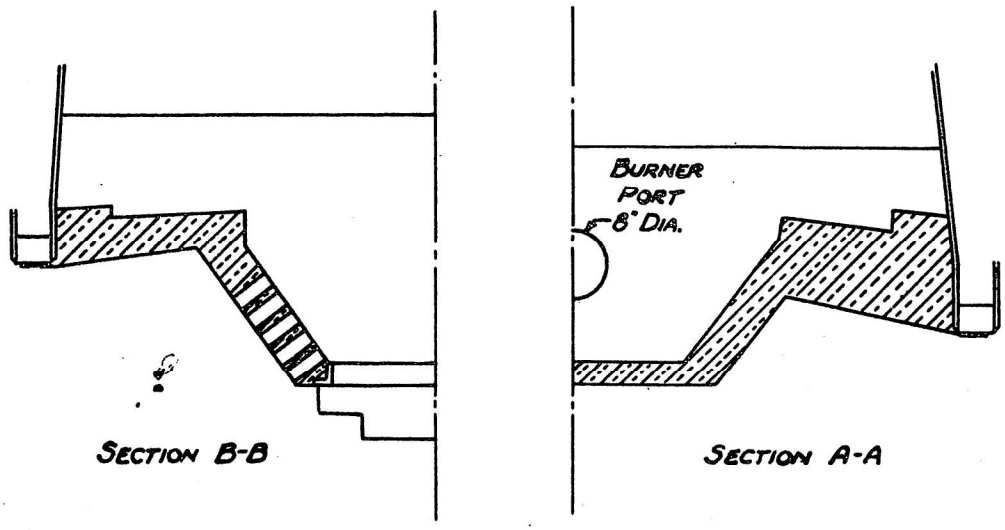


SECTION B-B

SECTION A-A

FIRE PAN ARRANGEMENT, T-12

STANDING TEST PLANT, SACRAMENTO

FIG. No. 38

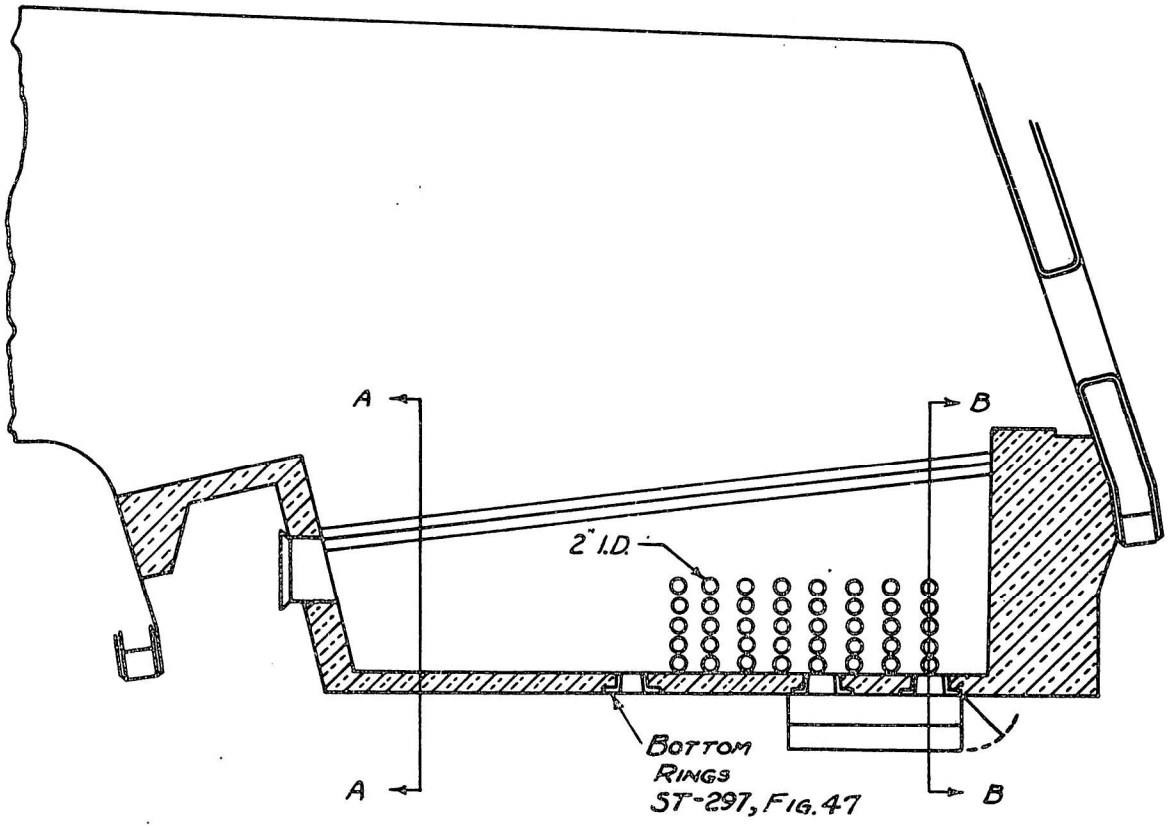


SECTION AT VERTICAL ℄

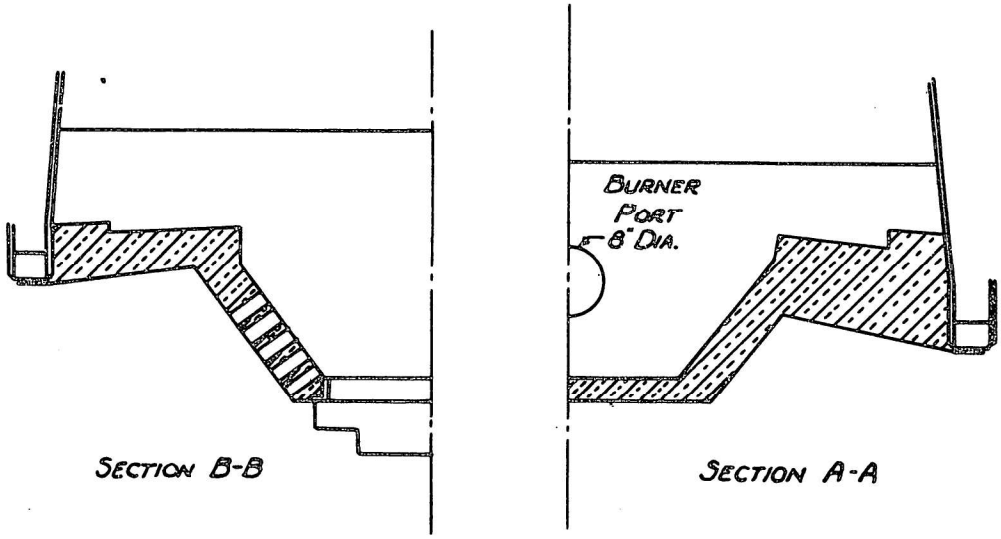


SECTION B-B

SECTION A-A

FIRE PAN ARRANGEMENT, T-13

STANDING TEST PLANT, SACRAMENTO

FIG. No. 39

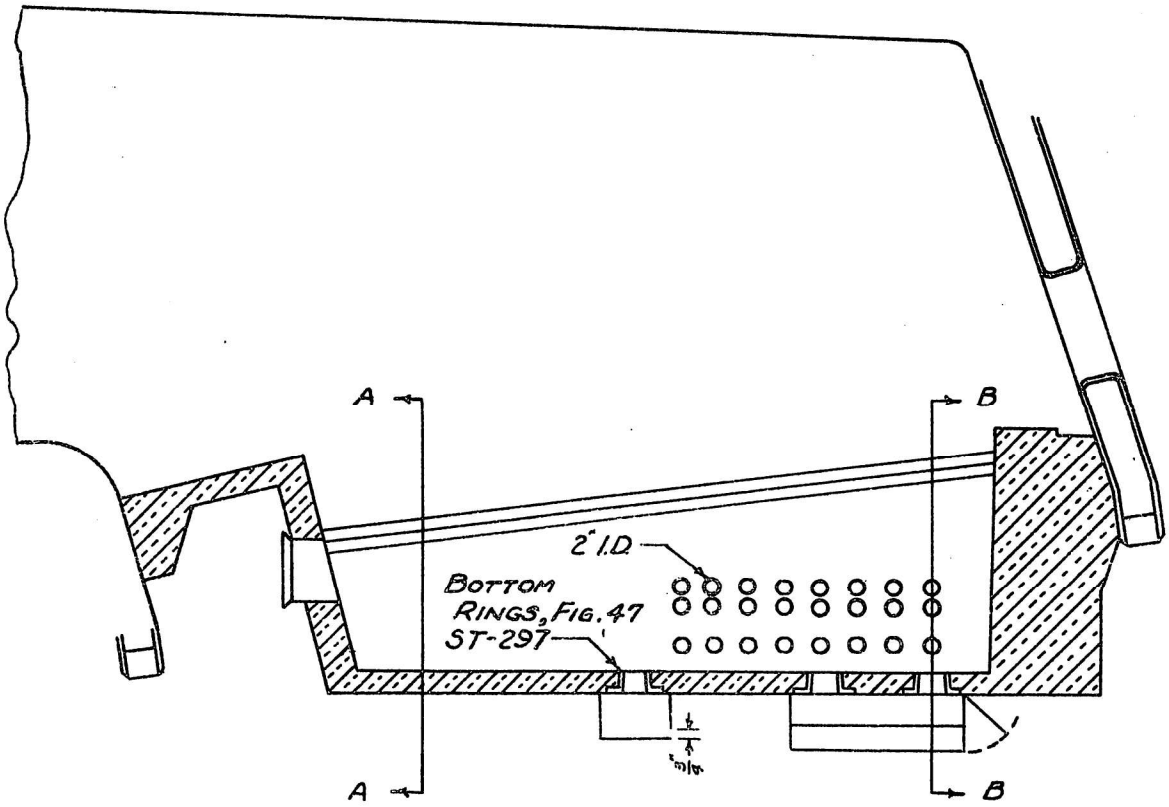


SECTION AT VERTICAL ℄

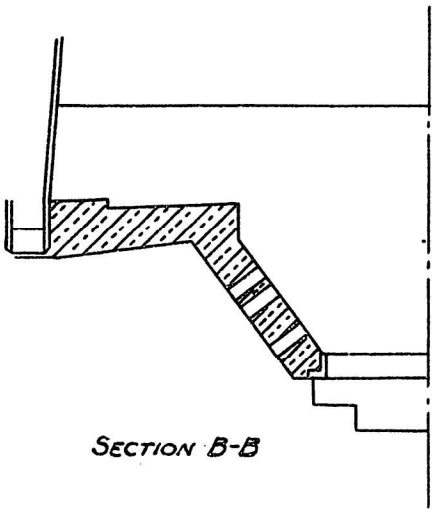

SECTION B-B

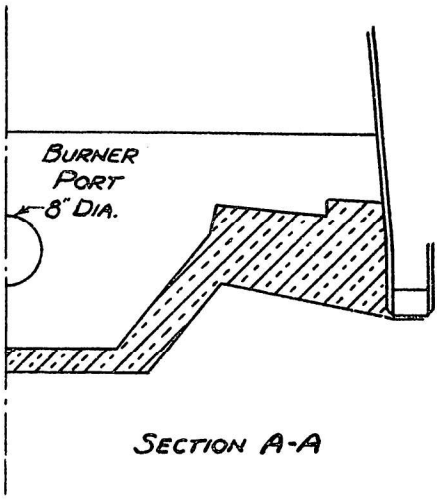


SECTION A-A

FIRE PAN ARRANGEMENT, T-14

STANDING TEST PLANT, SACRAMENTO

FIG. No. 40

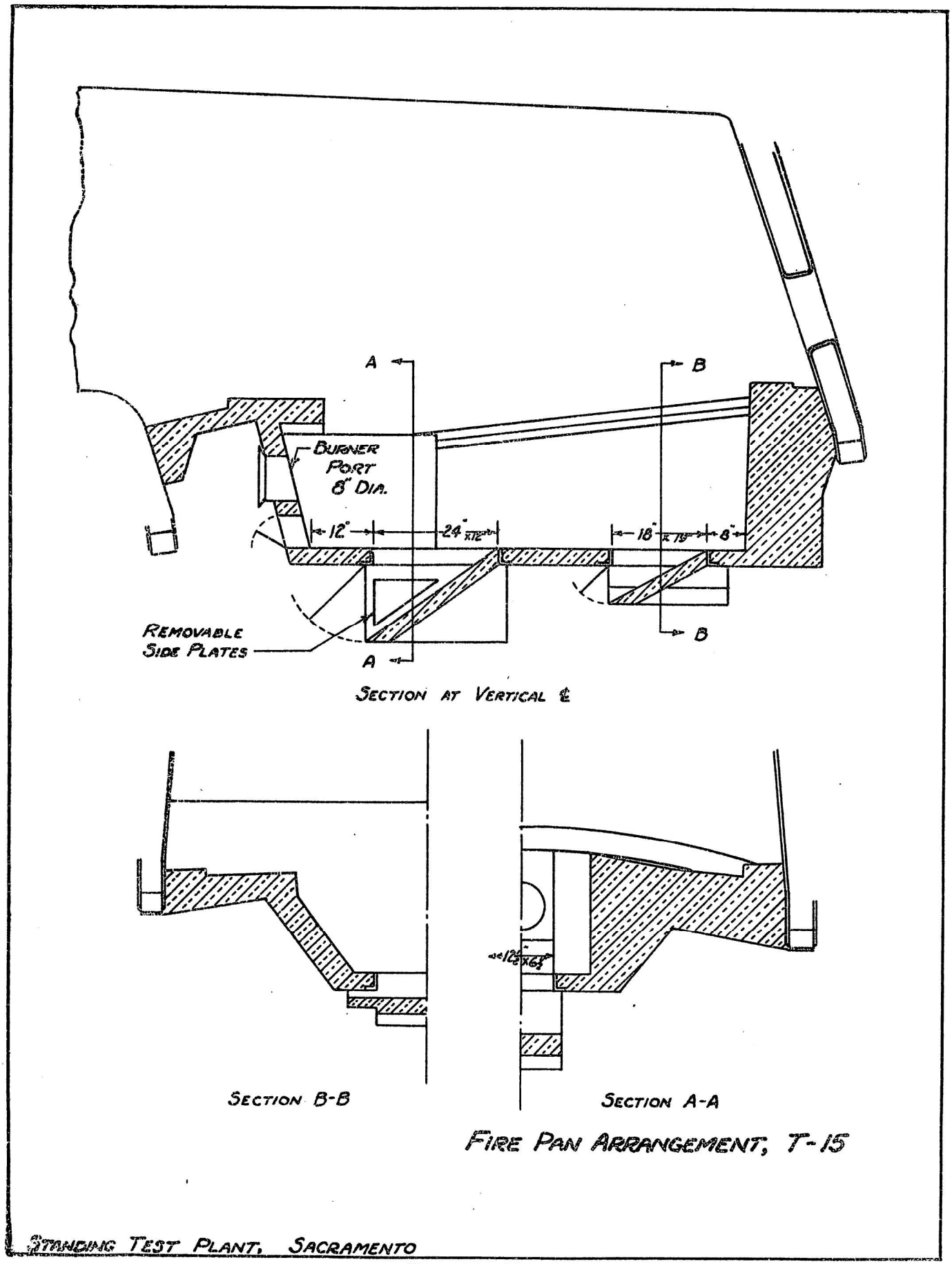
A
B
BURNER PORT 8" DIA.
12"
24" x 12"
18" x 18"
8"
REMOVABLE SIDE PLATES
A
B
SECTION AT VERTICAL ℄
SECTION B-B
SECTION A-A
FIRE PAN ARRANGEMENT, T-15
STANDING TEST PLANT, SACRAMENTO

FIG. No. 41

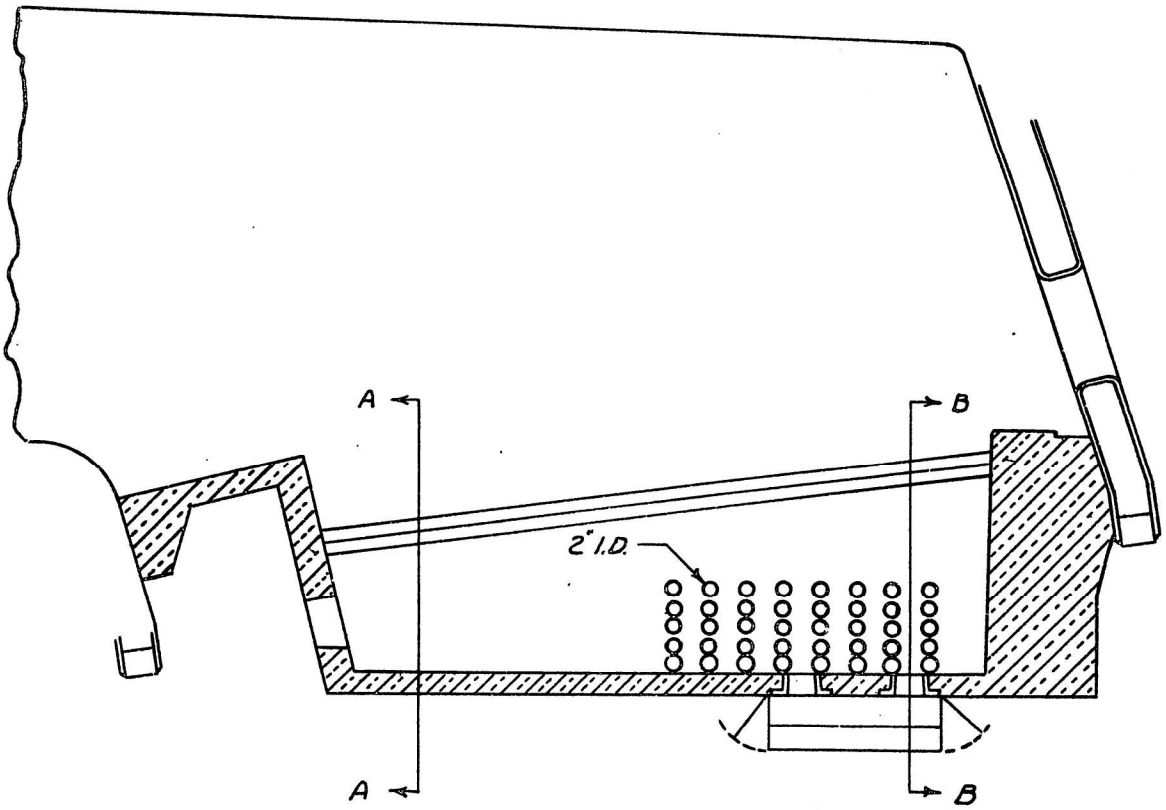


SECTION AT VERTICAL ℄

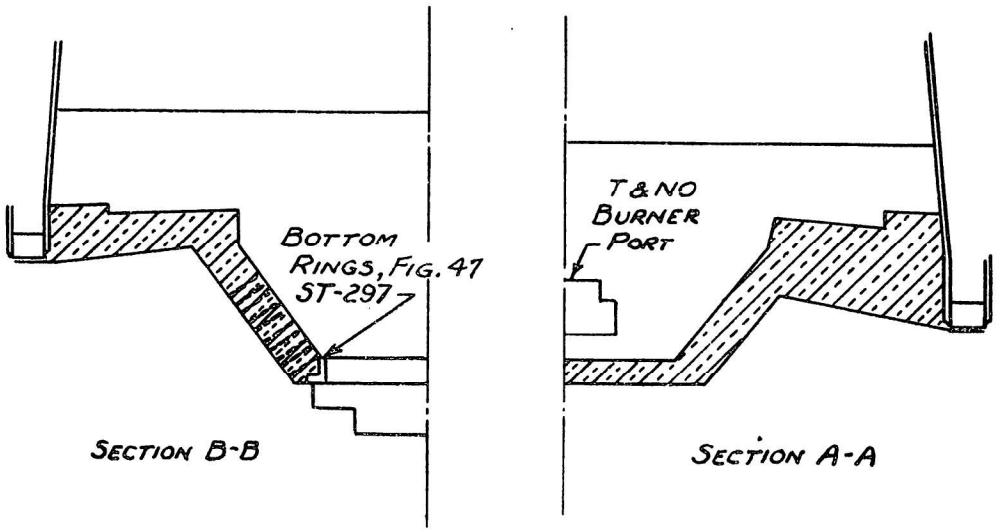


SECTION B-B

SECTION A-A

FIRE PAN ARRANGEMENT, T-16

STANDING TEST PLANT, SACRAMENTO

FIG. No. 42

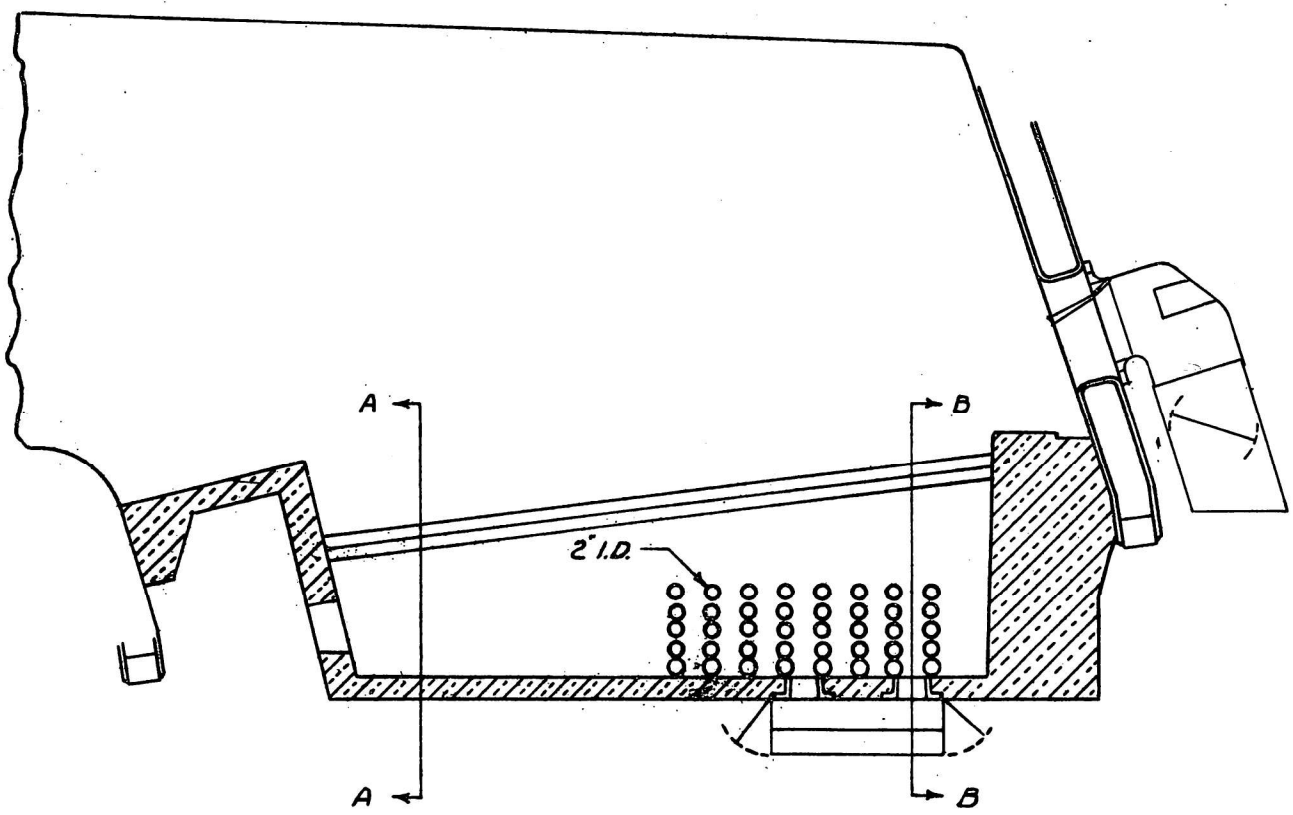


SECTION AT VERTICAL ℄

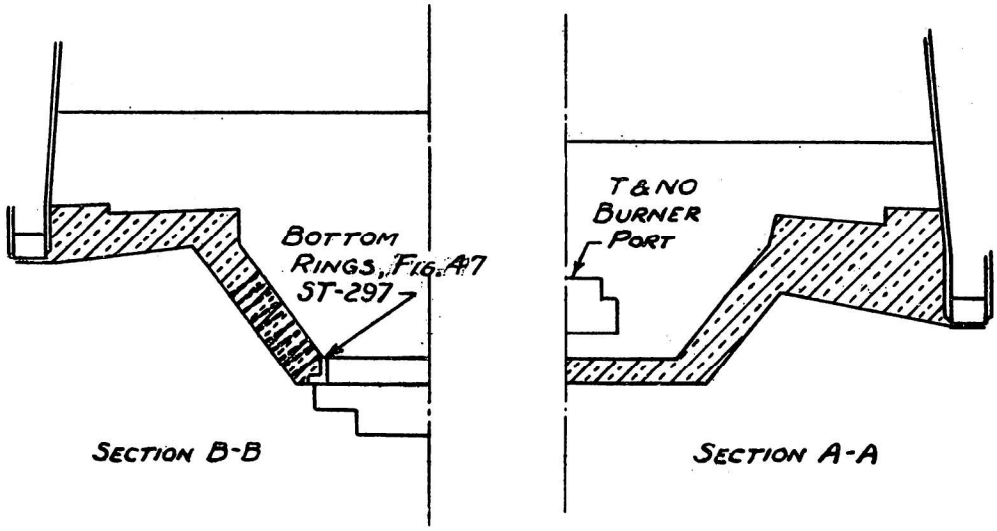


SECTION B-B

SECTION A-A

FIRE PAN ARRANGEMENT, T-17

STANDING TEST PLANT, SACRAMENTO

FIG. No. 43

ST-931

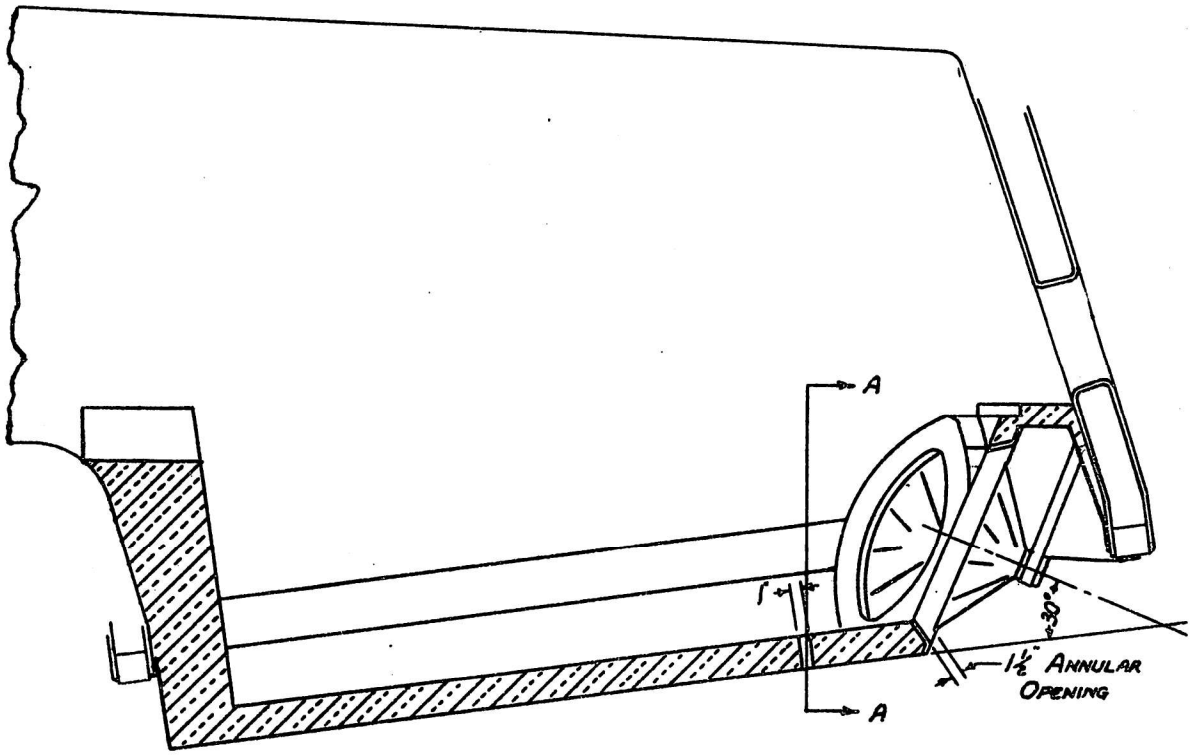


Section at Vertical ℄

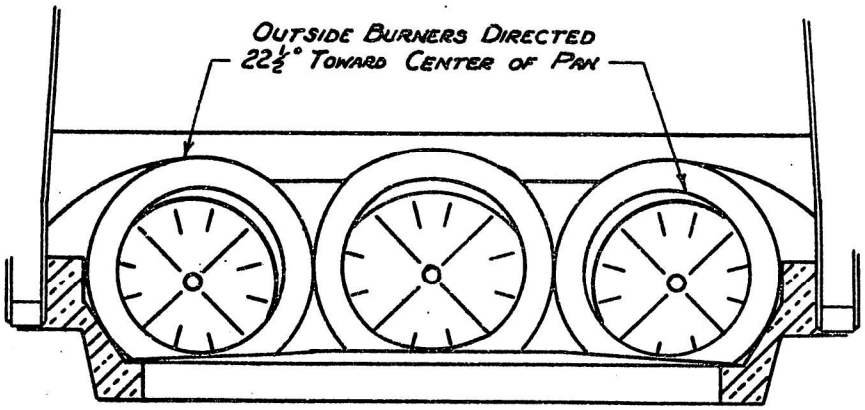


Section A-A

Fire Pan Arrangement, T-18

Standing Test Plant, Sacramento

Fig. No. 44

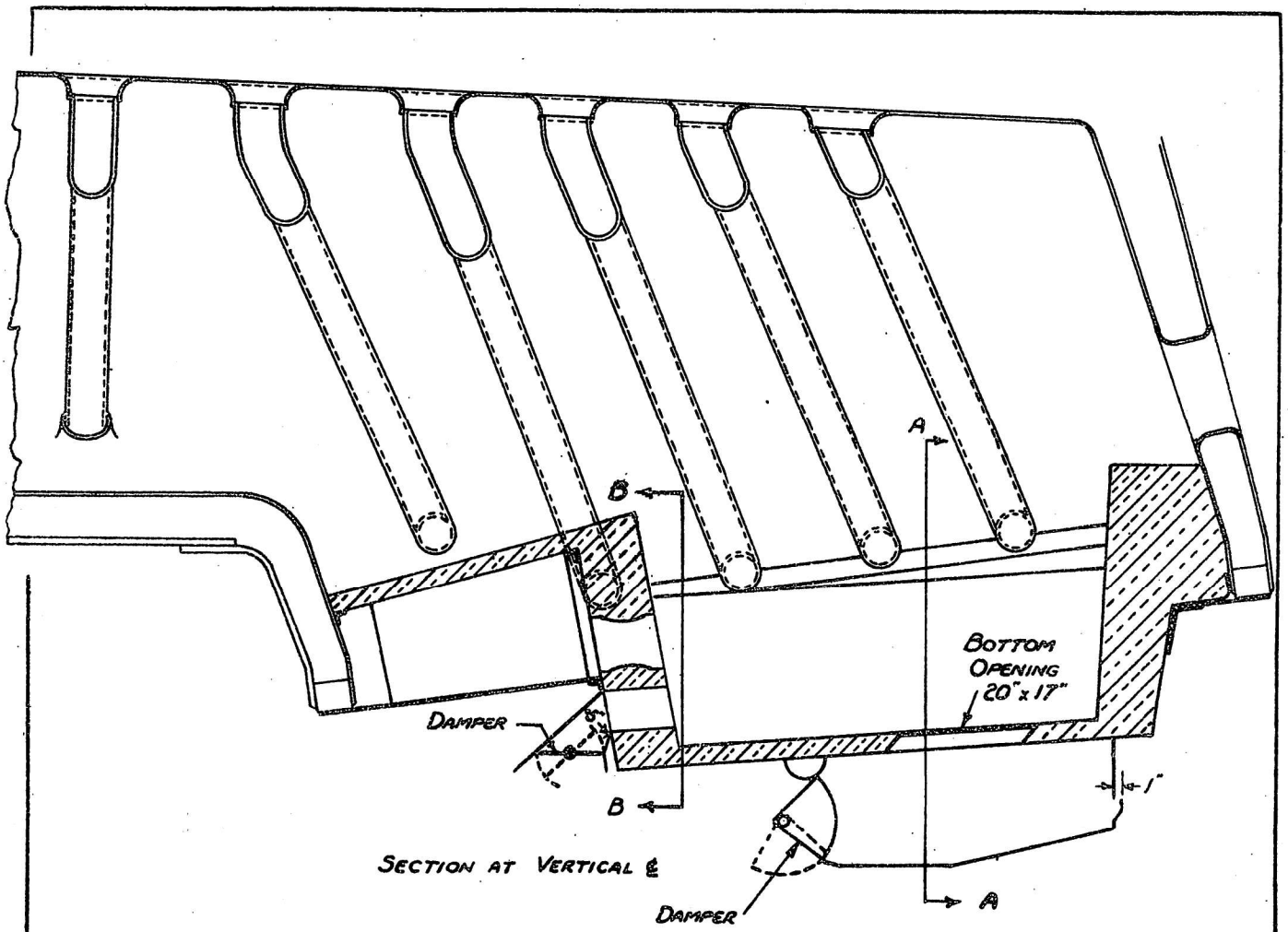


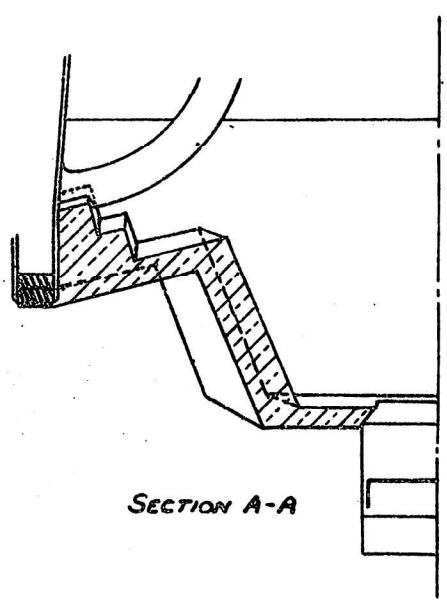


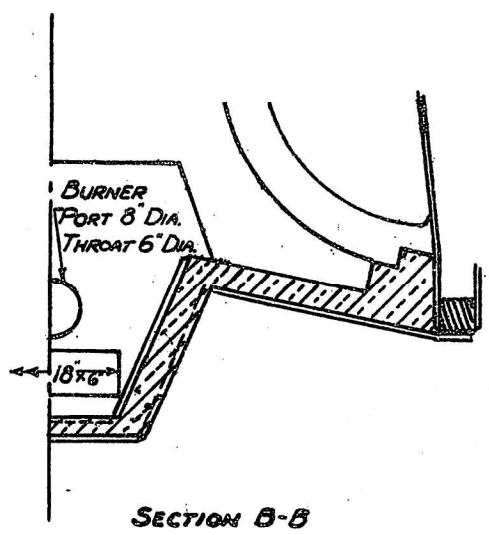


FIRE PAN ARRANGEMENT, T-19

STANDING TEST PLANT, SACRAMENTO

FIG. No. 45

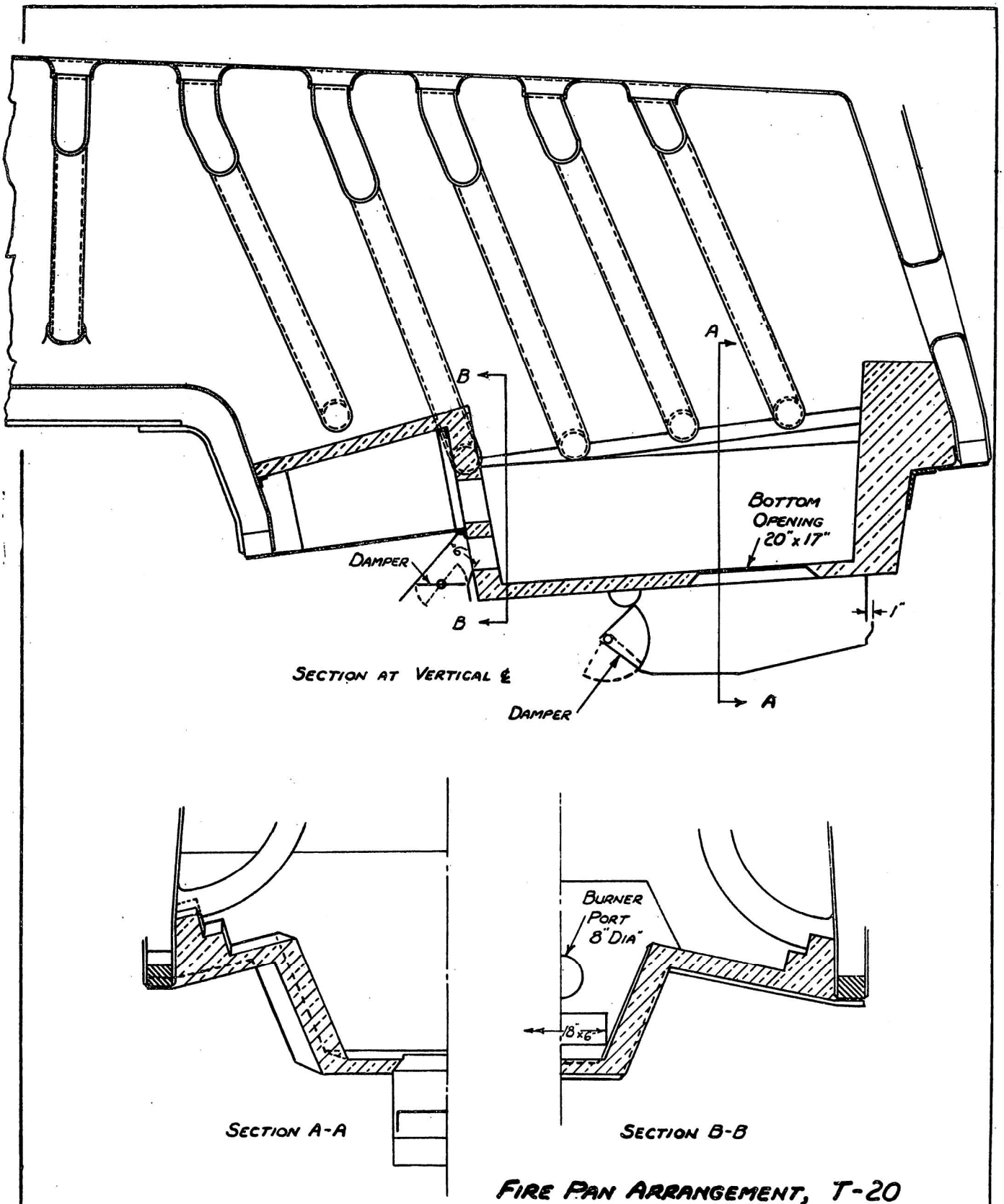


FIRE PAN ARRANGEMENT, T-20

STANDING TEST PLANT, SACRAMENTO

FIG. No. 46

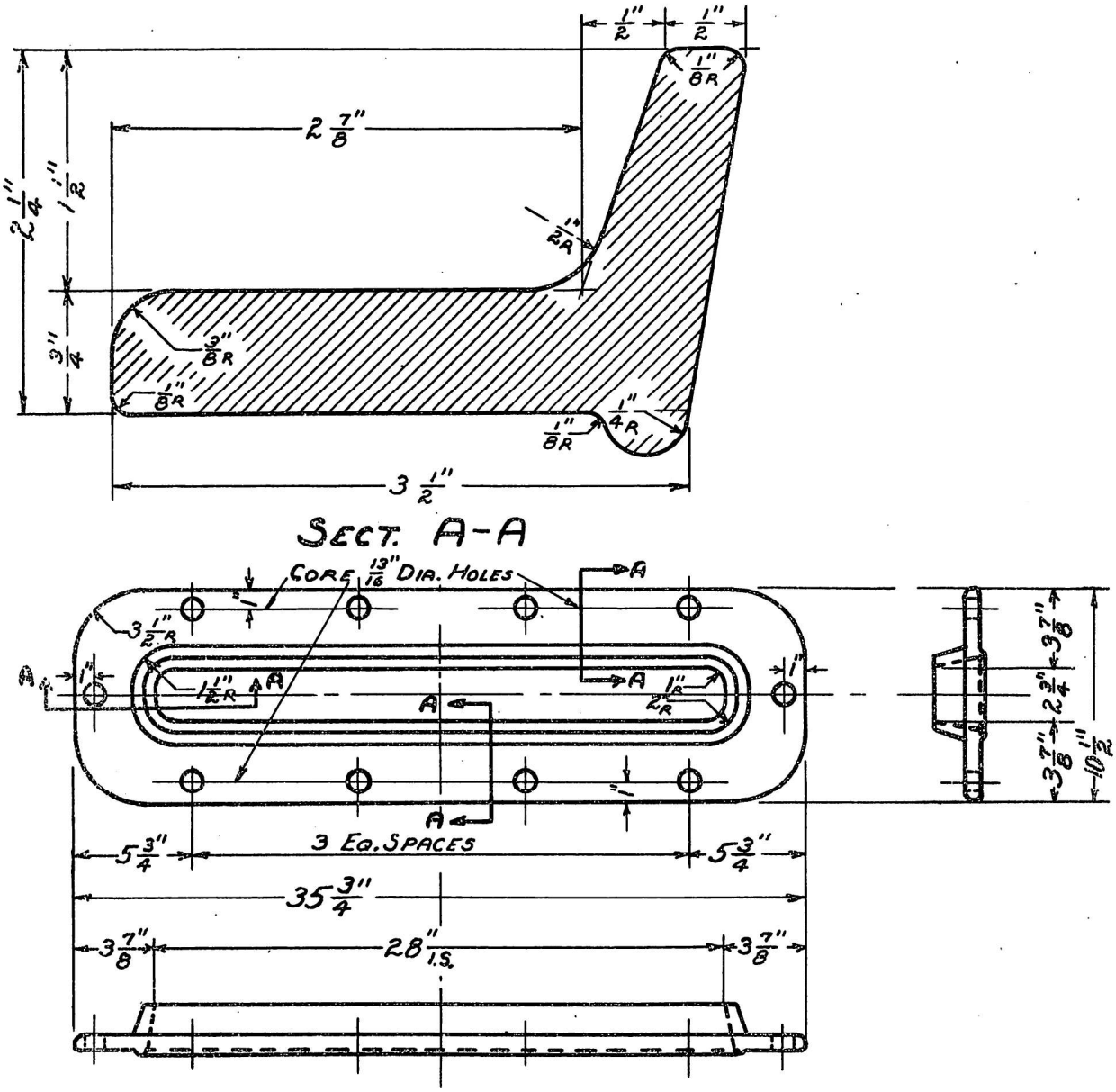


BOTTOM RING NO ST-297
MAT'L: CAST IRON
3 PER LOCO.

# FIRE PAN DRAFT BOTTOM RING

STANDING TEST — ENGINE 4401

STANDING TEST PLANT, SACRAMENTO

FIG. No. 47

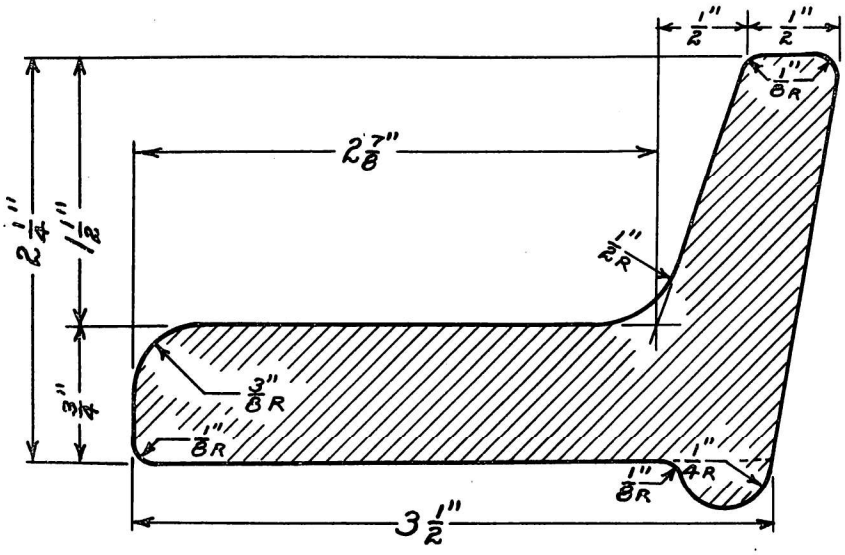


SECT. A-A

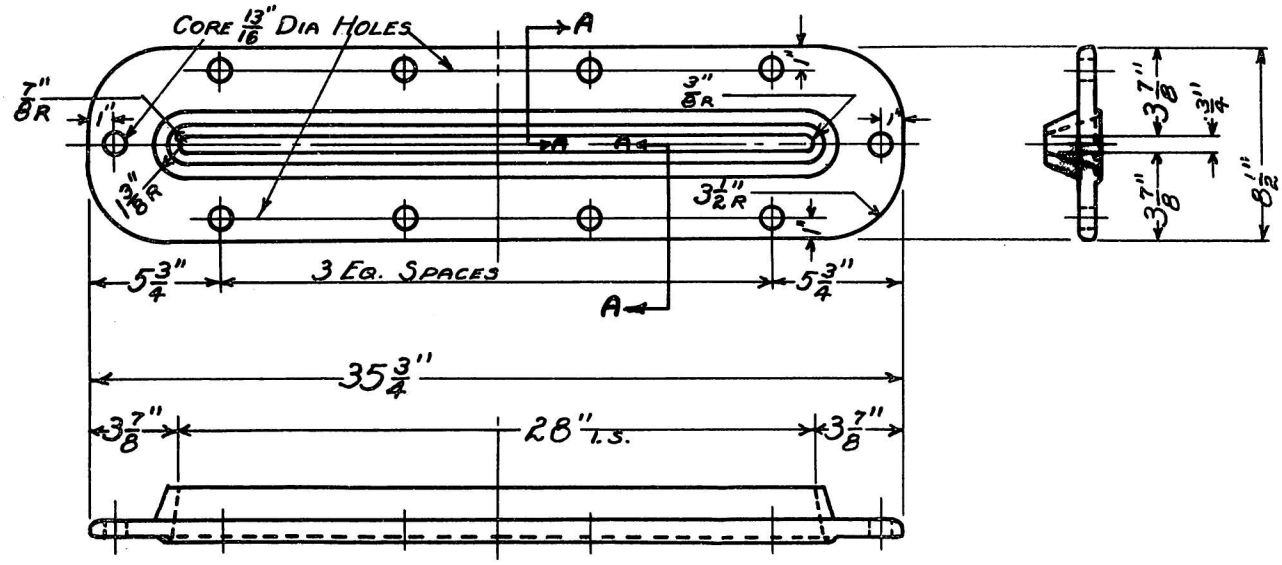


BOTTOM RING NO. ST-298
MATL: CAST IRON
1 PER LOCO

# FIRE PAN DRAFT BOTTOM RING

STANDING TEST — ENGINE 4401

STANDING TEST PLANT, SACRAMENTO

FIG. NO. 48

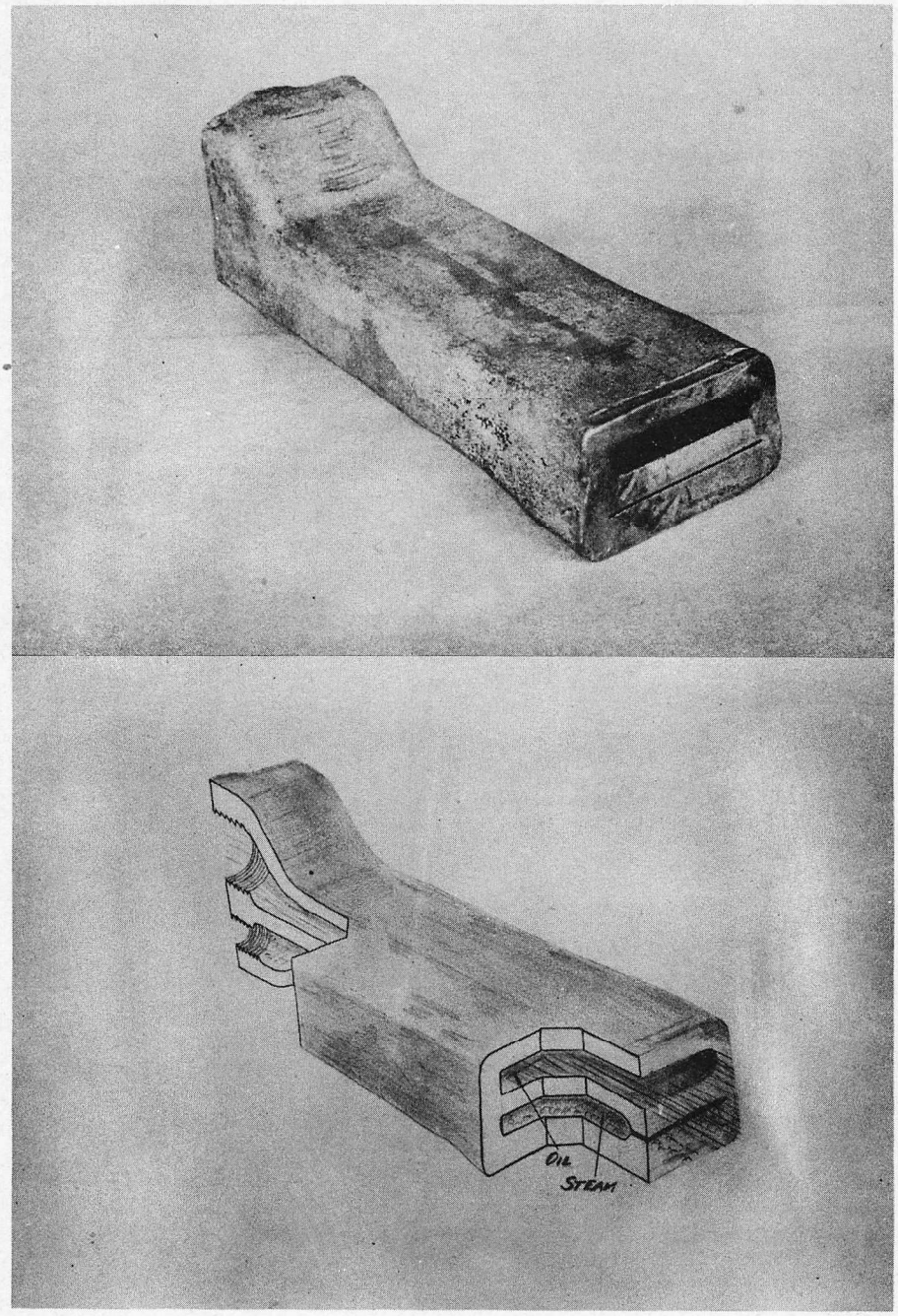


BOOTH BURNER

The Texas and Pacific Ry., 2-1/2" size, Booth type burner. This type illustrates the basic principle of design common to the majority of locomotive oil burners in use, that is, a horizontally elongated oil outlet is provided, from which the oil flows by gravity down onto a similarly elongated jet of steam, issuing from either a thin flat slot or multiple, in-line jets placed a short distance under the oil outlet. In this burner the steam slot was slightly longer than the oil slot, to prevent spillage over sides of jet.

Photo No. 5-1

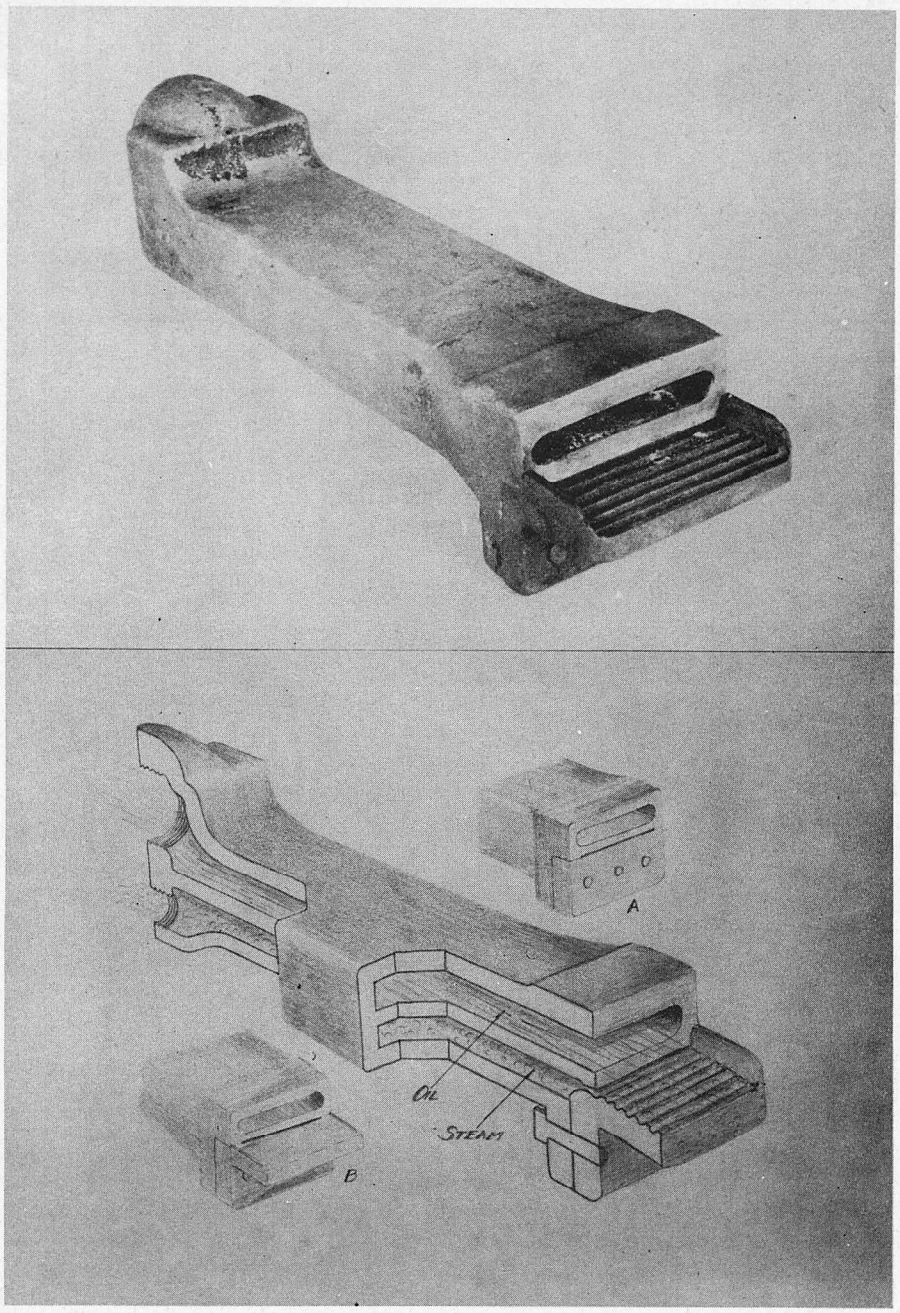


ST. LOUIS SOUTHWESTERN RY.

This burner employs the usual method of atomization, but, having a removable portion, variations in the refinements of design are readily made. Tip style A, makes the burner the basic, or Booth type. Tip style B, a smooth lip, converts the burner to a design intermediate to the Booth and the Von Boden corrugated lip type shown in main illustration. The removable lips facilitate machining of atomizer slot and maintenance of size in service through renewals of the lips, but difficulties were experienced in preventing leakage of steam from joint. Design of pipe connection end is better than on regular Von Boden burners, requiring less machine work and facilitating removal of core sand.

Photo No. 5-2

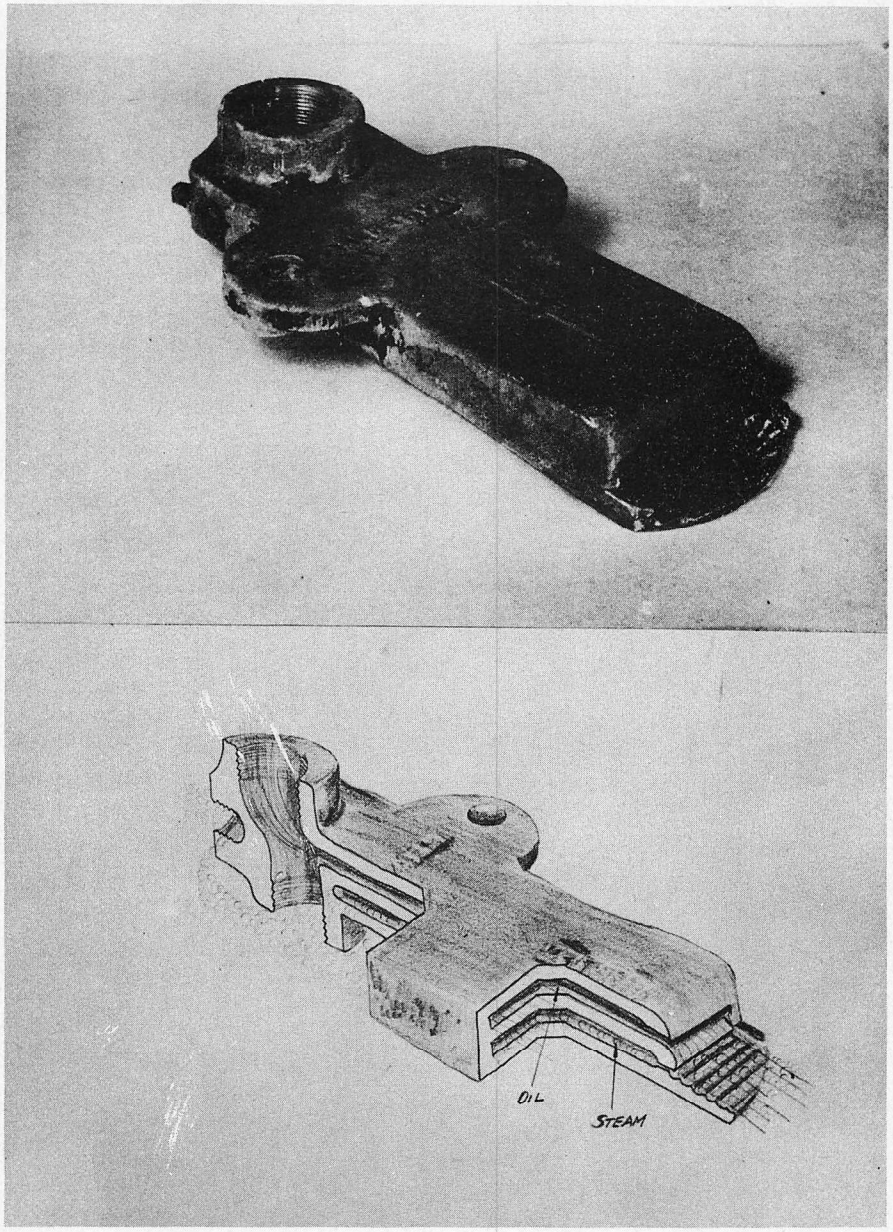


VON BODEN BURNER (PACIFIC LINES)

Burner shown in 3-1/2" size, is representative of the existing Pacific Lines standard in this and numerous other sizes ranging to 4-1/4". This type, compared with the Booth, has the extra feature of corrugated lip with low side walls and in addition, upper, inner face of oil passage has downward slope at outlet to deflect oil at full flows toward steam jet, which issues from a 1/32" thick slot. Cast-on lip and side walls, together with thinness of atomizing slot made precision finishing of atomizing section impractical, resulting in variations in performance between different burners. Removal of core sand from steam section is difficult and value of alternate oil connection is questionable, causing as it does, extra machining and complicating steam passage.

Photo No. 5-3

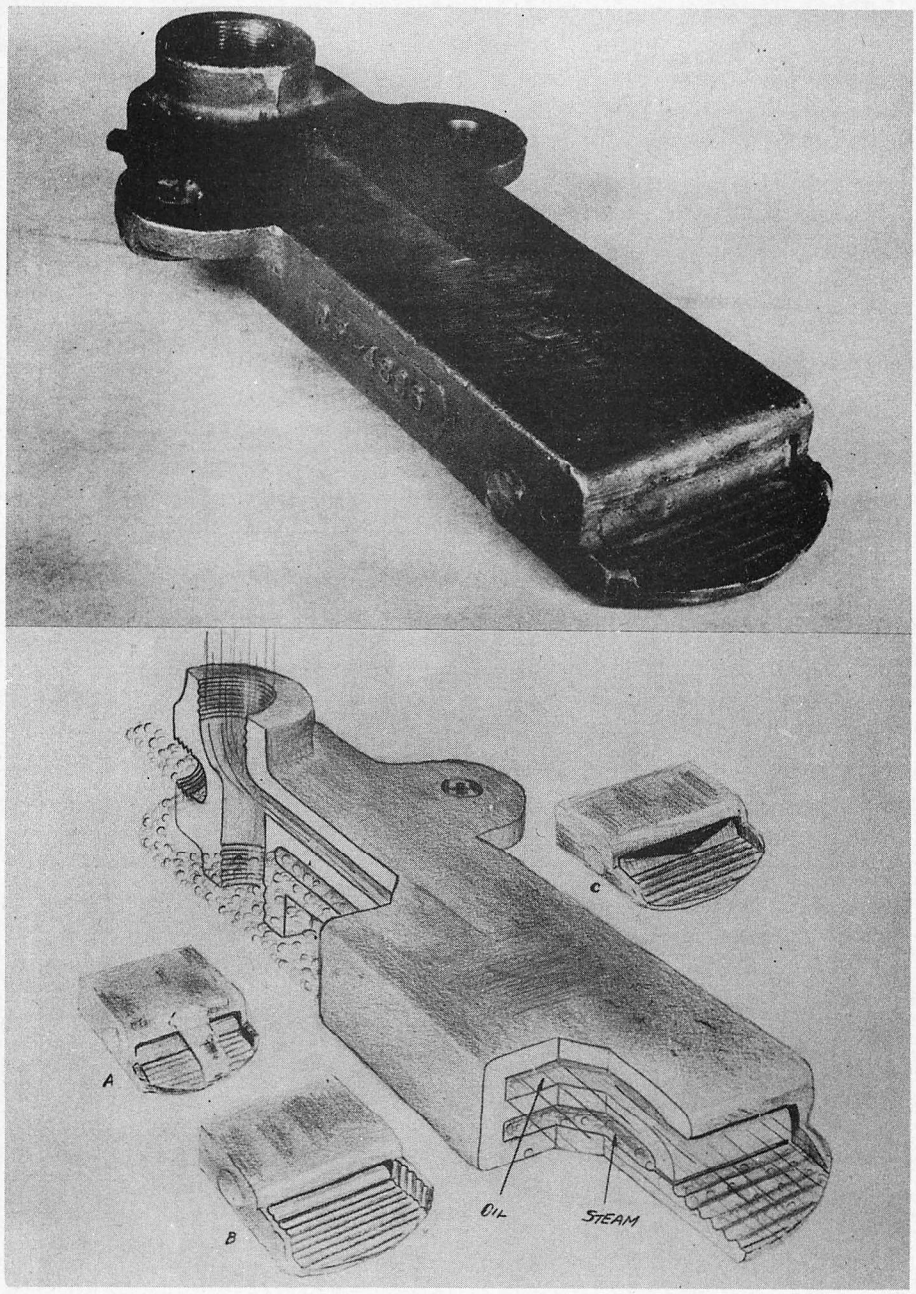


VON BODEN BURNER (T&NO LINES)

The T&NO Lines standard Von Boden burner design was identical with the Pacific Lines standard except in length. Because of use of a different style mounting bracket on T&NO locomotives, this burner was two inches longer to permit burner to extend into firepan an equal distance. To facilitate adjustments to burner position during standing tests, the longer T&NO burners were used almost exclusively for tests of Von Boden design, as the greater length allowed use of a simple, adjustable bracket mounted on the locomotive frame. It was for this reason, modifications illustrated were made to T&NO castings. Photo and cutaway are the standard design; style "A" was the "Strapped" modification, "B", the "Walled Exit" and "C" was designated as the "Shallow V."

Photo No. 5-4

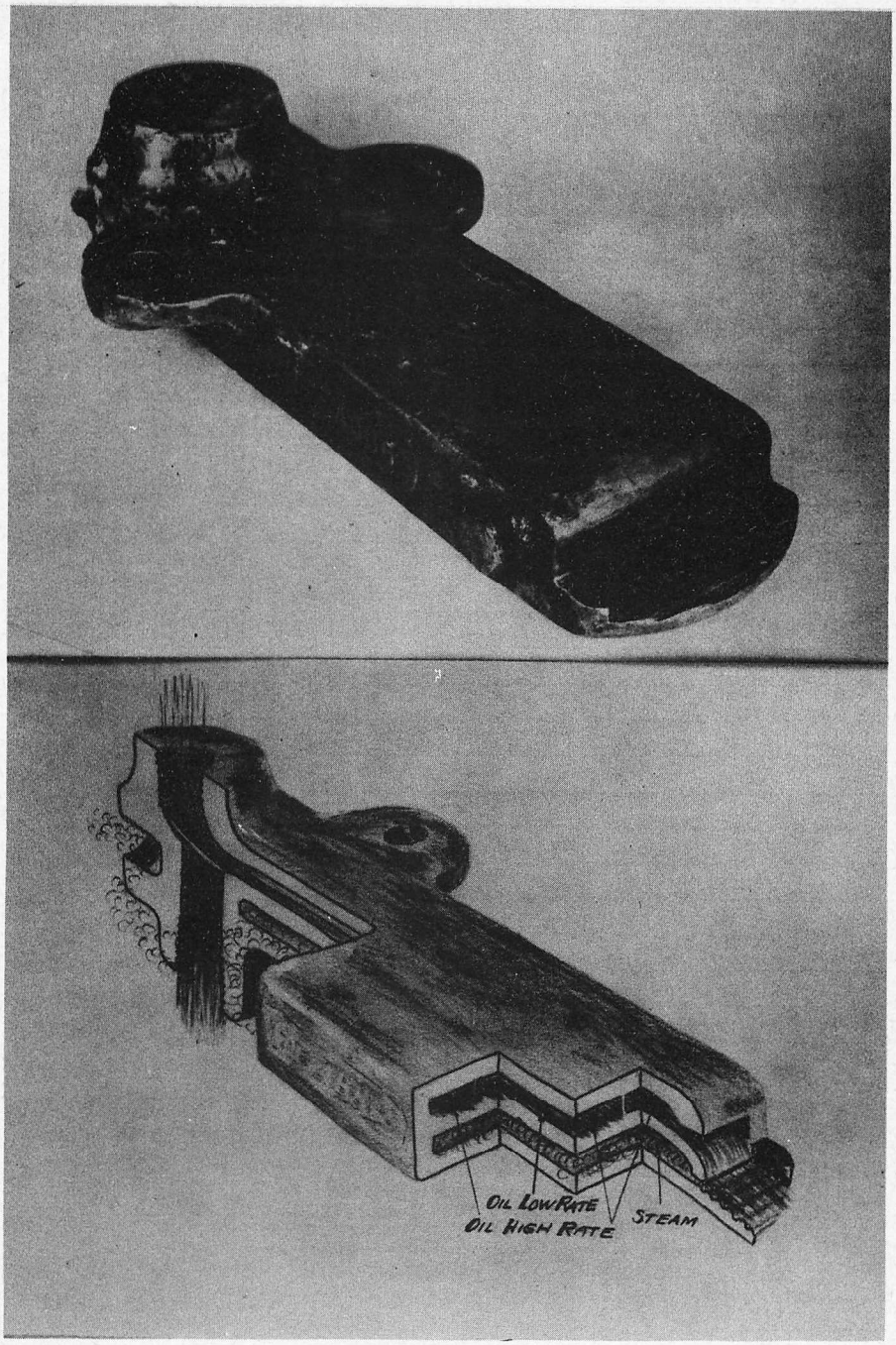


DIVIDED OIL PASSAGE VON BODEN

This burner was a standard T&NO Von Boden burner modified so that oil entering the top inlet could only pass through the central section of the three into which the normal passage was divided. The lower oil inlet was connected only to the two outside passages. The central passage was for use at low oil rates. For higher rates, oil was also introduced through the lower entry and with oil then passing through all three sections the burner functioned as a normal Von Boden.

Photo No. 5-5

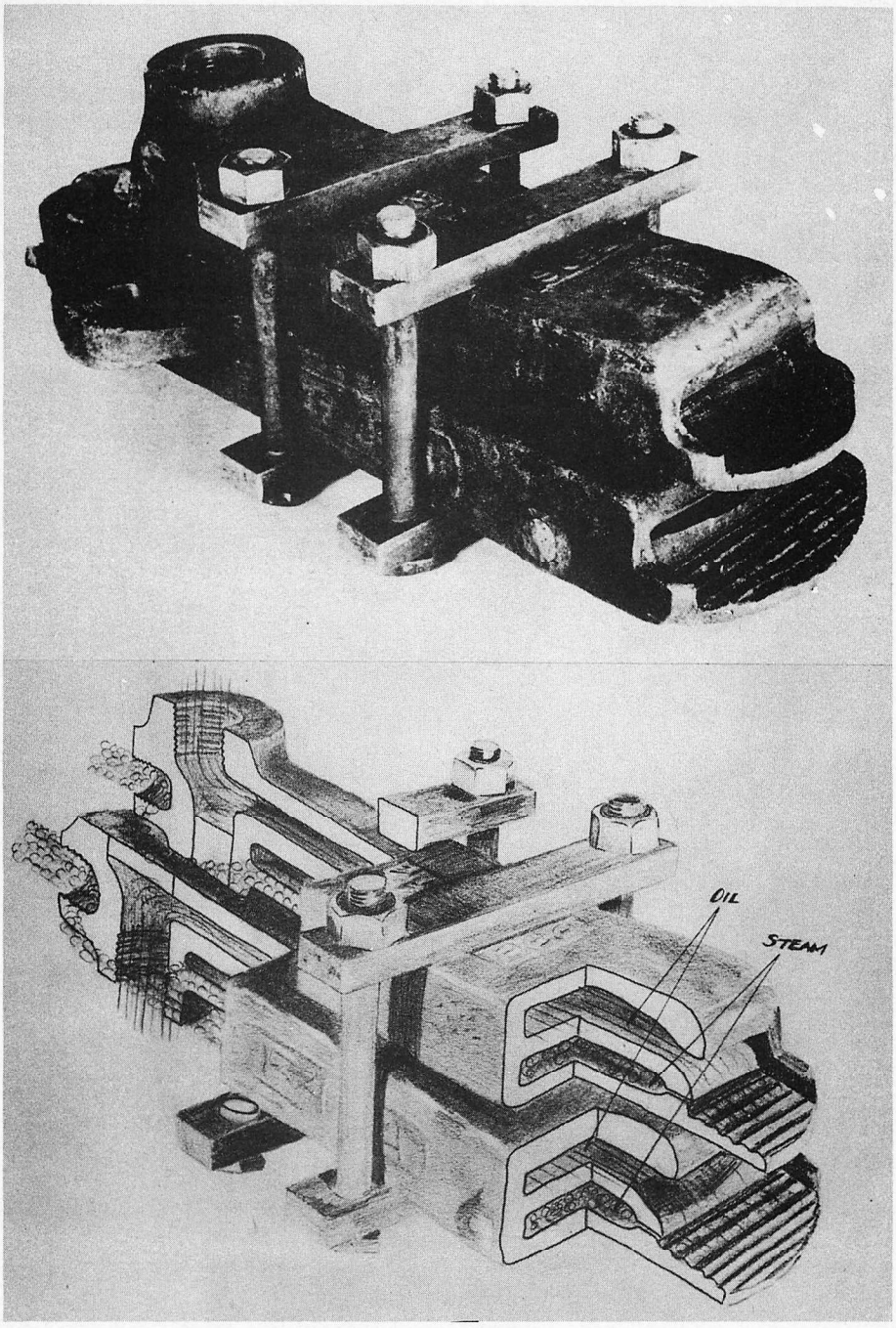


DOUBLE VON BODEN

This burner was merely a 2-1/2" size Von Boden held on the top of a 3-1/2" size burner with a clamping arrangement so that the relative positions of the tips could be varied. The combination was tried in position shown; with tip of top burner flush with oil outlet of lower, and with tip of top burner one inch to the rear of face of oil outlet of lower burner. The lower burner of combination shown was the Shallow Vee modification but last position with top burner set back, was also tried using a standard burner for the lower.

Photo No. 5-6

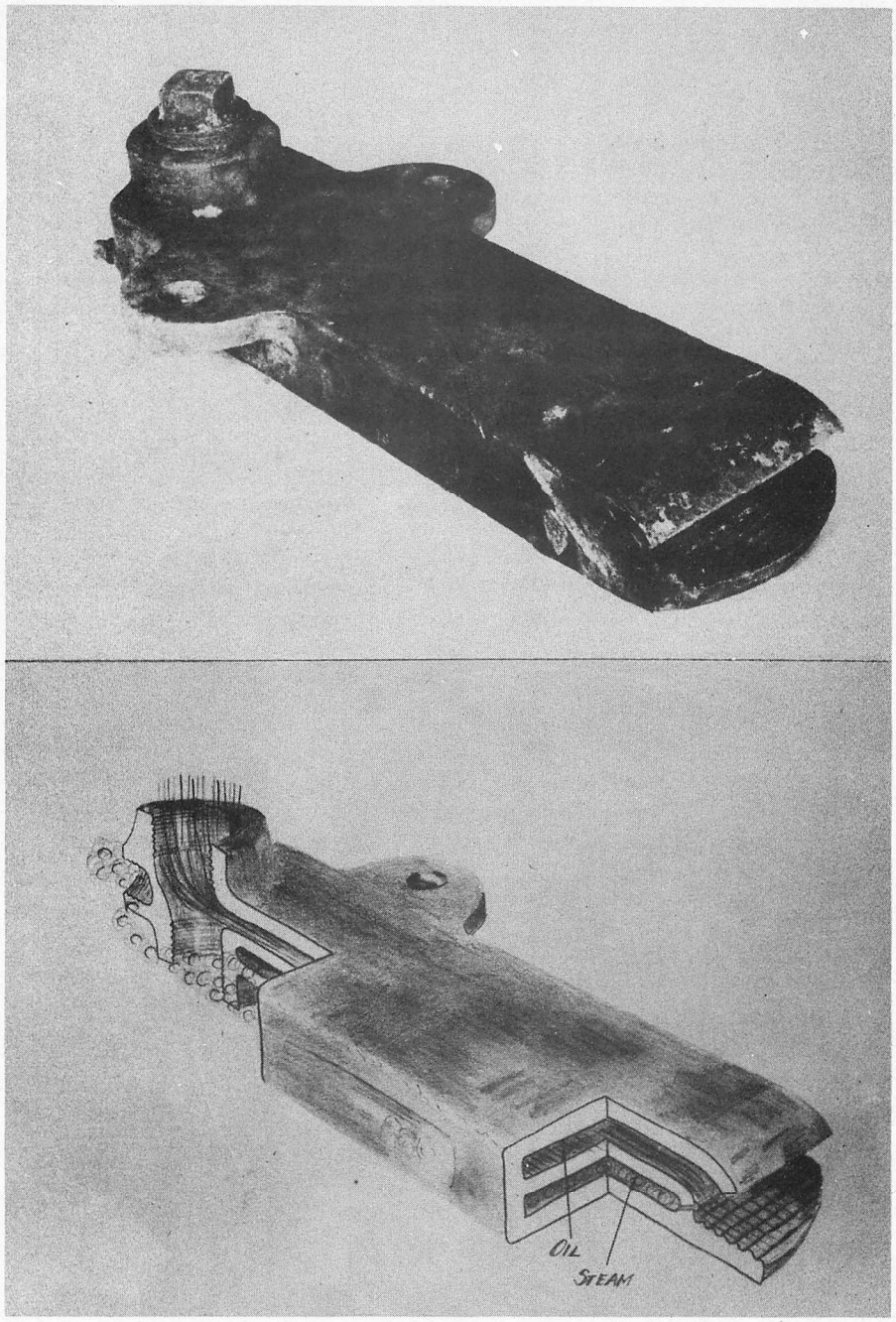


STEAM ASPIRATING VON BODEN

On this Von Boden burner the oil passage was extended by the addition of a curved hood or lip at the end of the burner, leaving the sides partly open. The atomizing steam slot was cut at an angle, to direct jet toward end of hood as indicated in cutaway sketch.

Photo No. 5-7

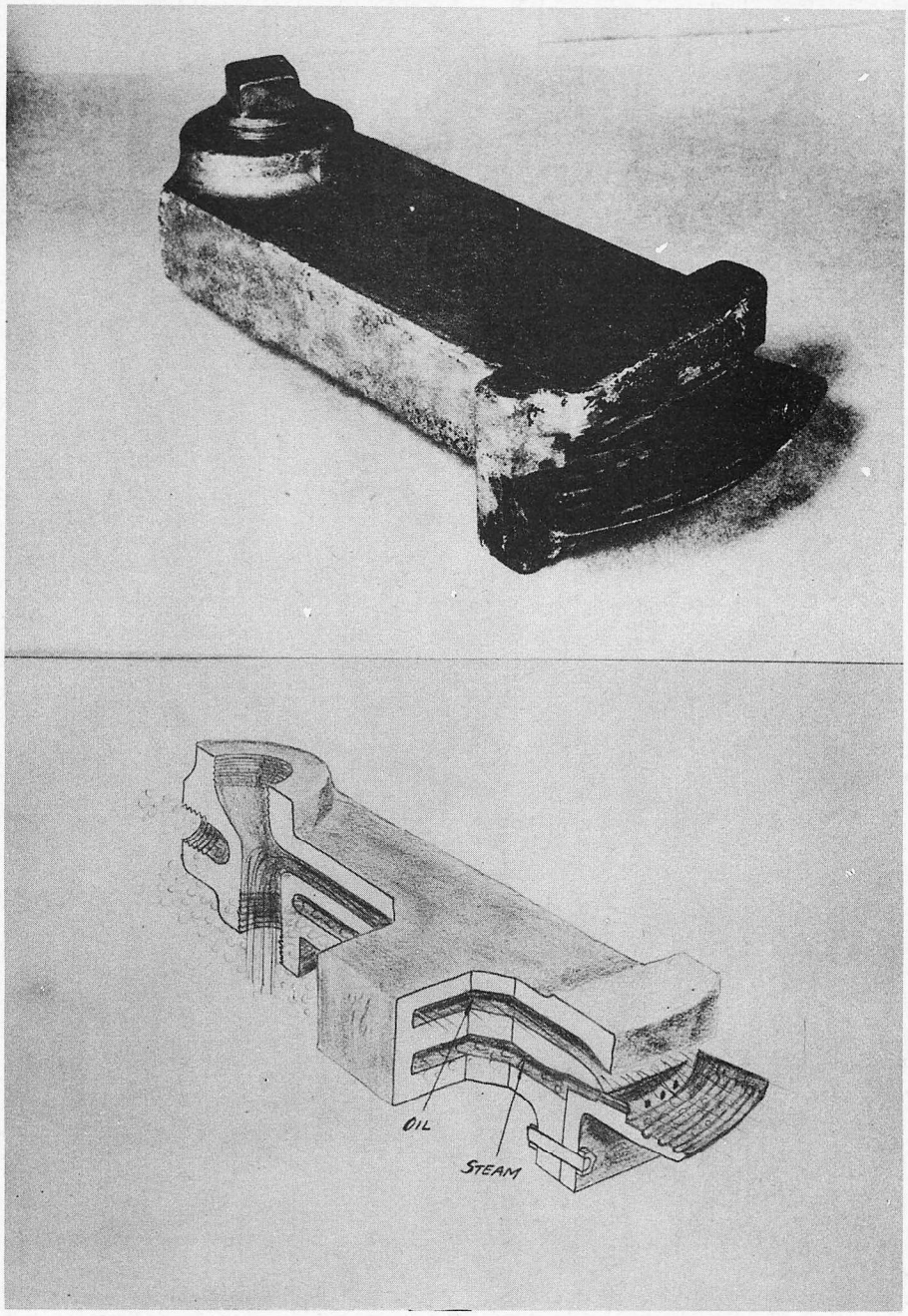


GREAT NORTHERN RY. BURNER

While this burner operated on the same principle as the Booth type, it may be noted that there were several refinements to improve performance. Most notable was the use of multiple atomizing steam jets radiating from a point on the burner axis, so as to provide a fan shaped spray, thus avoiding the usual heavy concentration of oil along line of burner axis. Oil outlet has deflecting upper surface to direct oil downward, where separation of steam into multiple jets provided access to entire entraining surface. Lip, under jets, held oil in contact and recesses increased availability of under parts of jets.

Photo No. 5-8

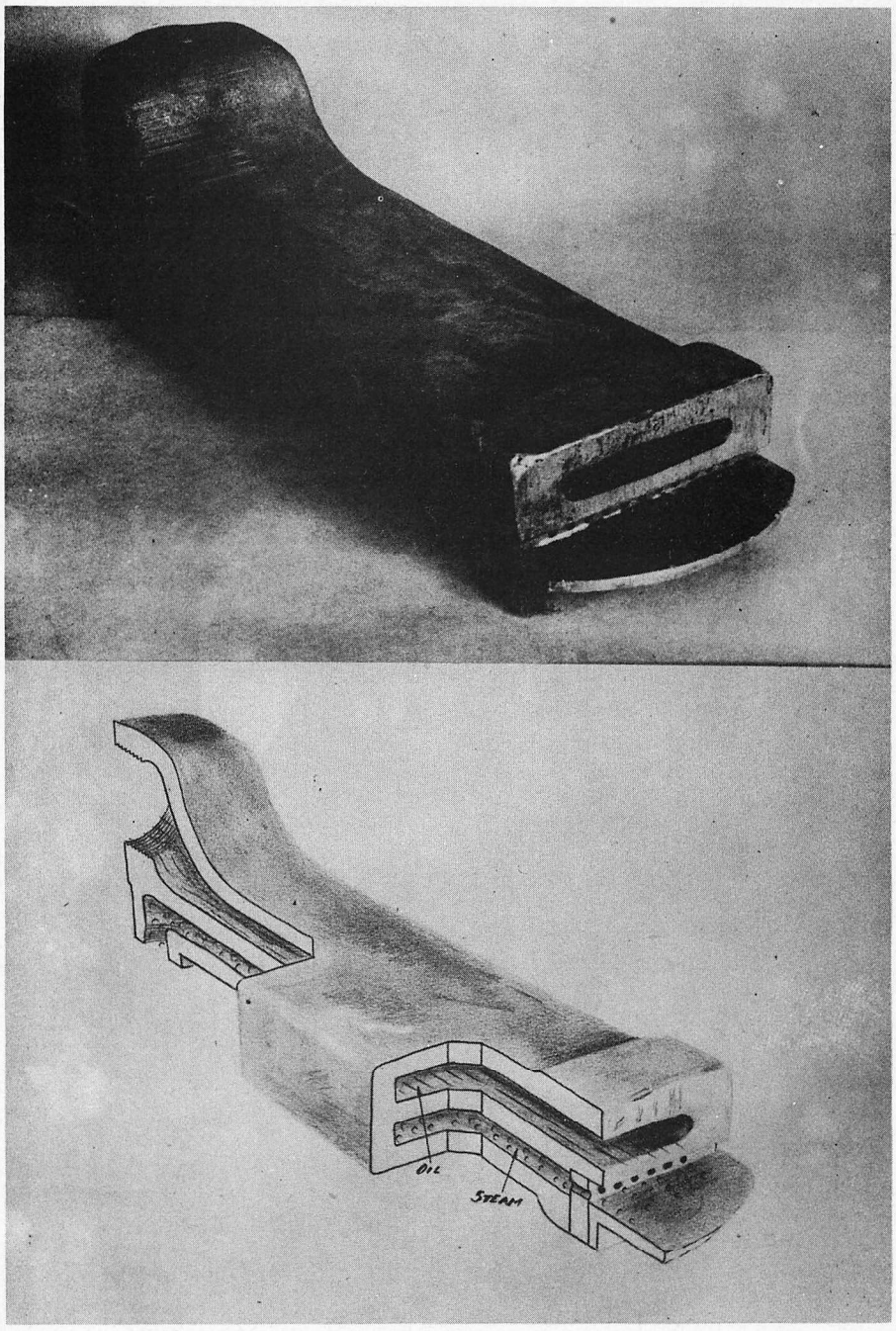


CHICAGO, ROCK ISLAND & PACIFIC R.R. BURNER

In this burner the simplicity of the Booth type had been modified by the addition of a removable orifice plate to provide a steam orifice of the more effective fan shaped multiple jet type, together with a smooth surface lip. The oil outlet was plain and straight without a deflecting surface on upper edge. The outlets of the atomizing steam orifices were recessed slightly under the oil outlet, but the reason for this was not apparent.

Photo No. 5-9

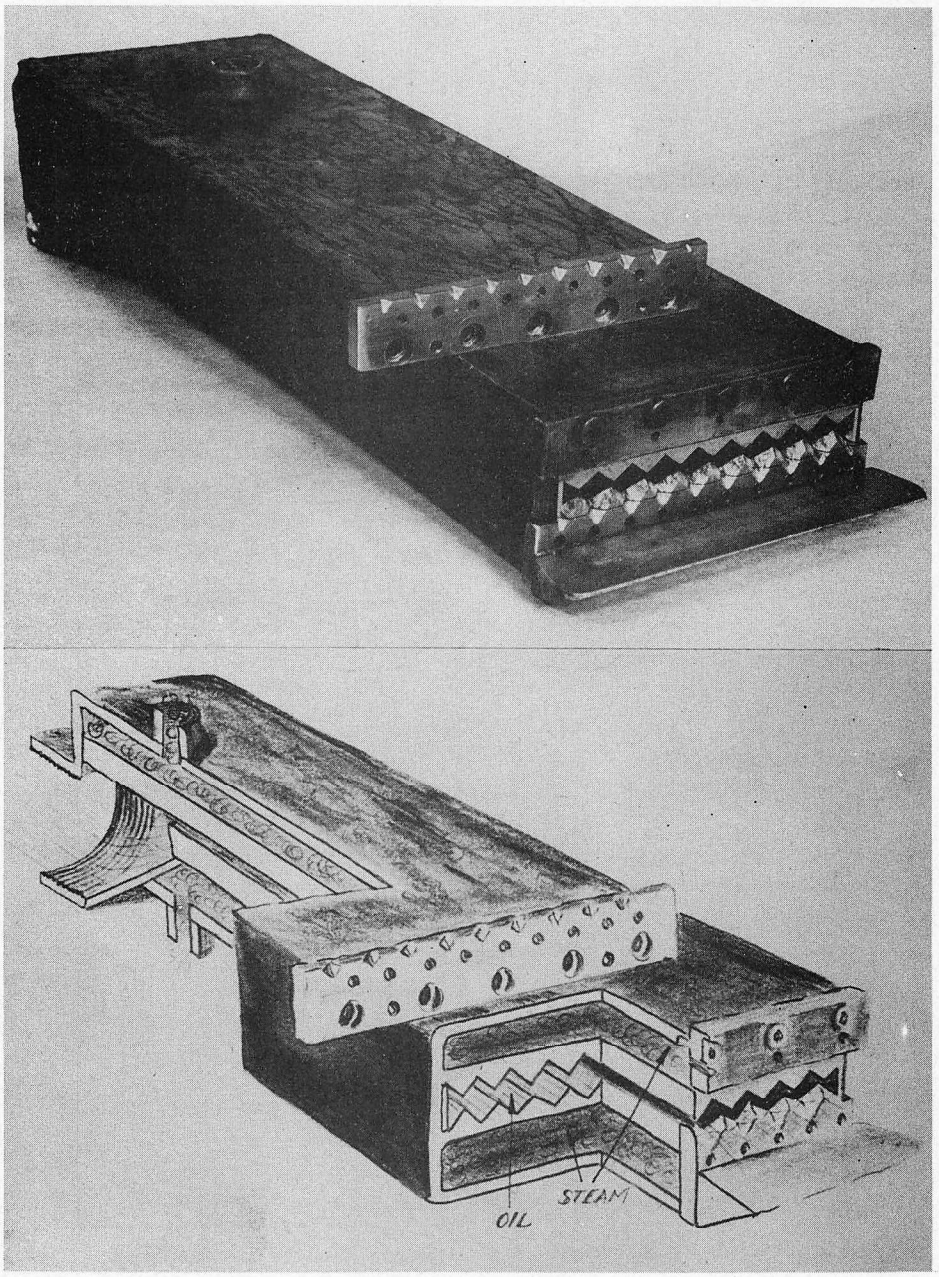


MULTIPLE VEE CHANNEL BURNER

This was an experimental burner combining several unique features in an attempt to eliminate some of the usual deficiencies in performance. Steam jets were provided above the oil outlet to reduce upward scattering of oil. The main atomizing steam issued from multiple, expanding nozzles, designed to increase velocities, and arranged to produce a fan shaped spray to reduce concentration at center. Oil entry was inverted from the Booth type to provide a small reservoir from which the oil entered a machined passage with a contiguous diamond cross section, all for the purpose of improving distribution of oil across burner. For experiment, two main orifice plates were provided, with jets positioned under, and between the diamonds of oil outlet, as shown.

Photo No. 5-10